TO-220F	NPN	Silicon NPN transistor in a TO-220F Plastic Package.

Wide ASO, low saturation voltage, high breakdown voltage.

Parameter	Symbol	Rating	Unit

/ Electrical Characteristic Curve

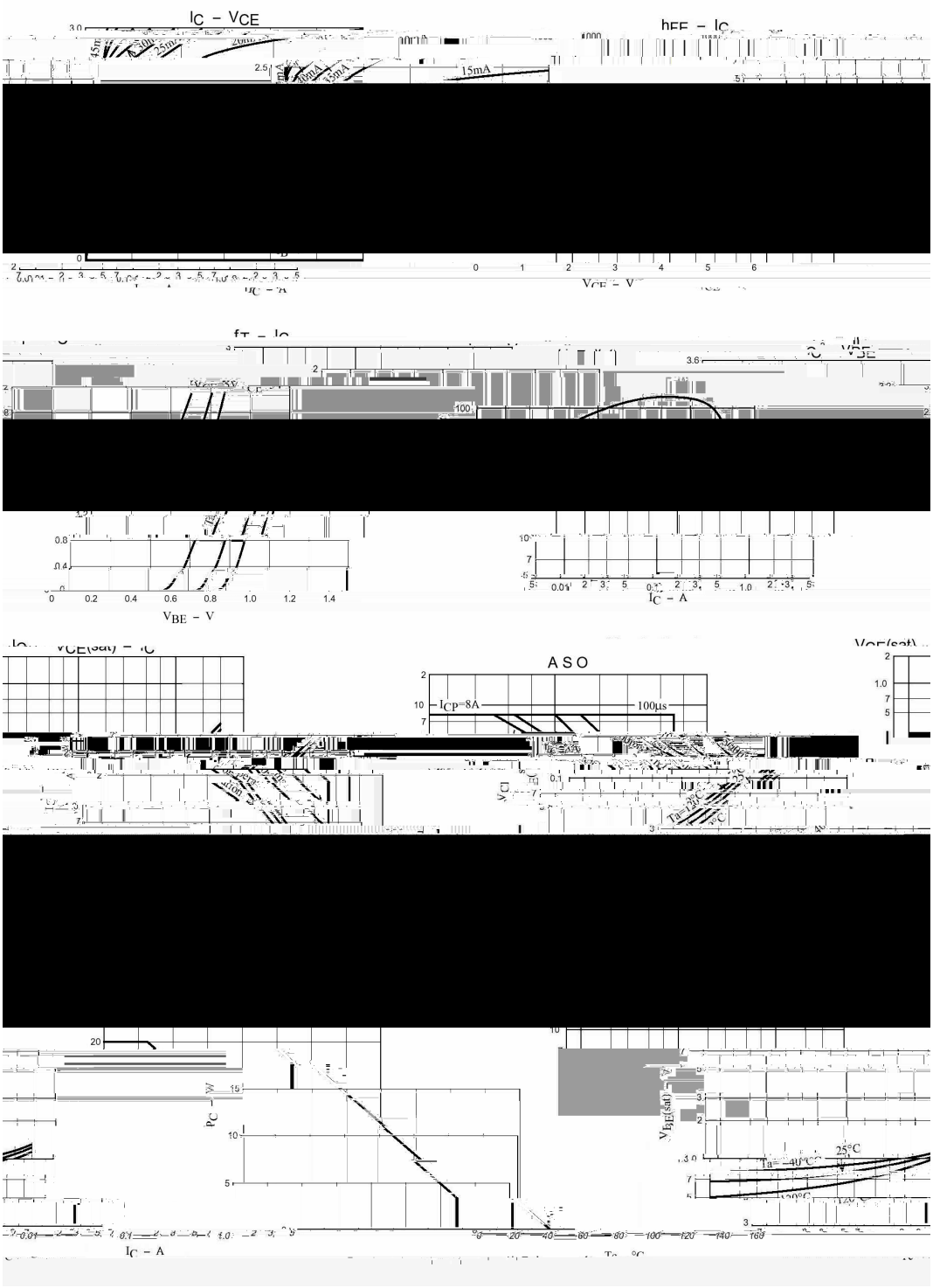

/ Package Dimensions

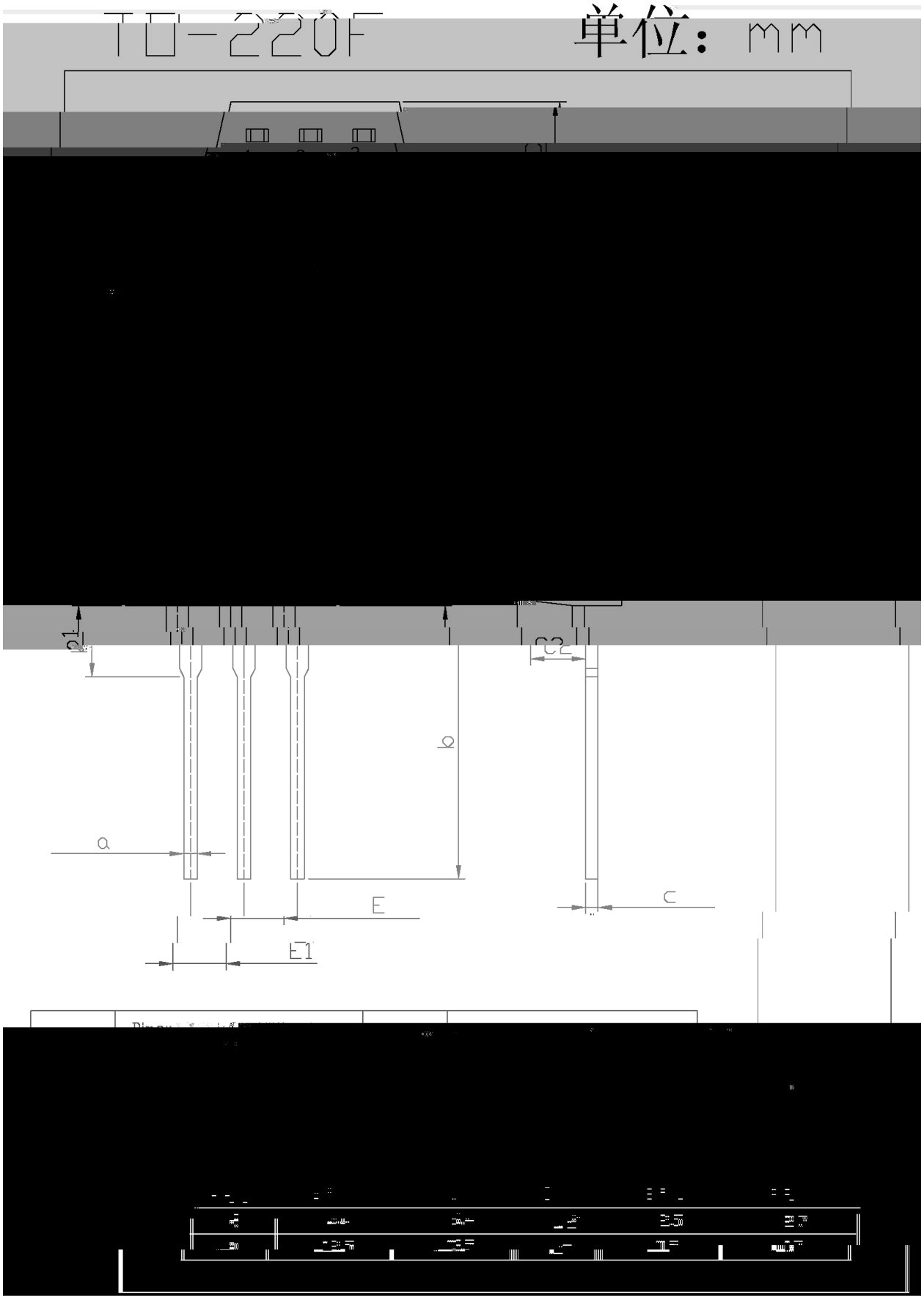

/ Marking Instructions

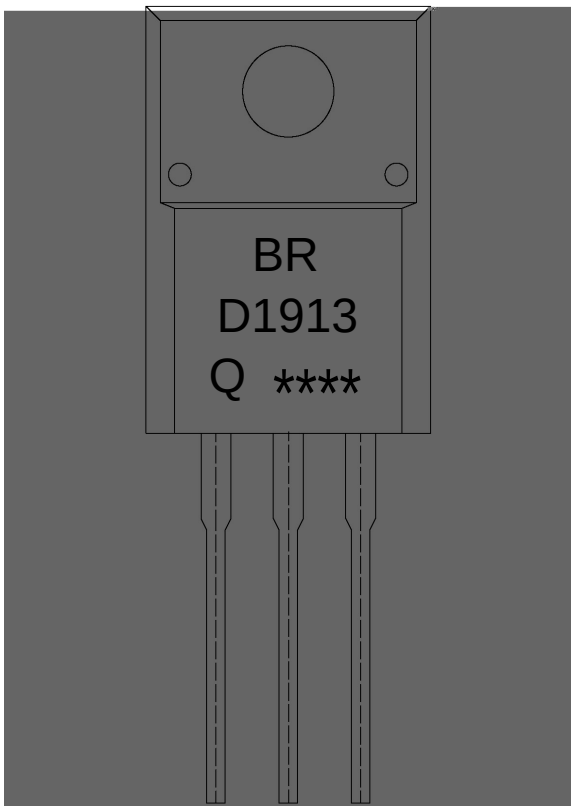

BR

D1913

Q: h_{FE}

****

Note:

BR:	Company Code.
D1913:	Product Type.
Q:	h_{FE} Classifications Symbol
****:	Lot No. Code, code change with Lot No.

( ) / Temperature Profile for Dip Soldering(Pb-Free)

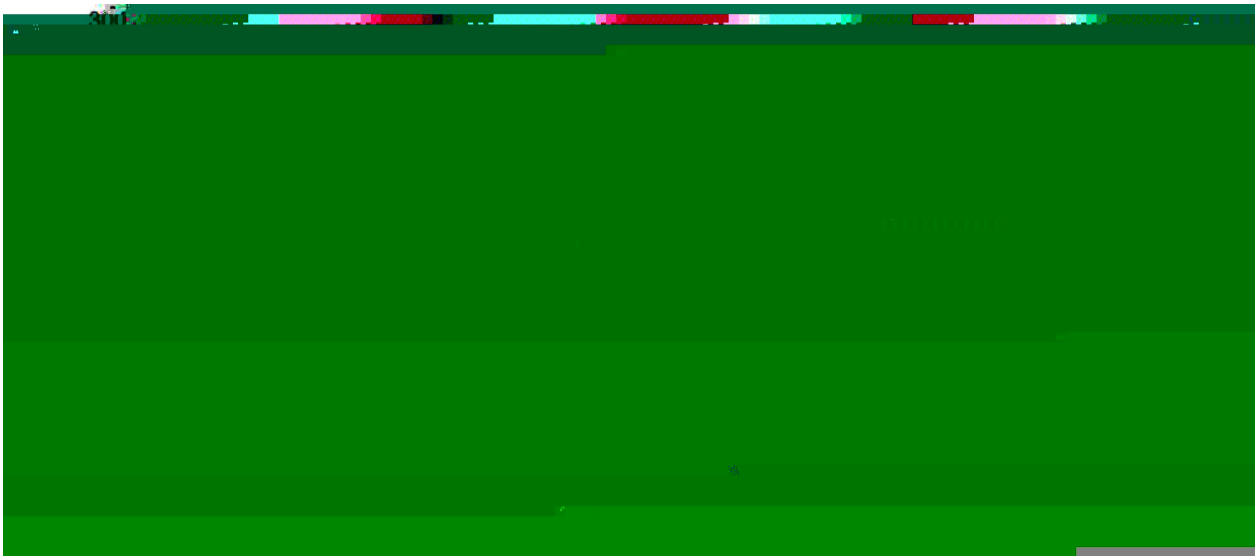

			Note:
1	25 150	60 90sec;	1.Preheating:25~150 , Time:60~90sec.
2	255±5	5±0.5sec;	2.Peak Temp.:255±5 , Duration:5±0.5sec.
3	2 10 /sec.		3. Cooling Speed: 2~10 /sec.

/ Resistance to Soldering Heat Test Conditions

270±5	10±1 sec.	Temp.:270±5	Time:10±1 sec

/ Packaging SPEC.

/ BULK

Package Type	Units					Dimension		(unit mm^3)
	Units/Bag /	Bags/Inner Box /	Units/Inner Box /	Inner Boxes/Outer Box /	Units/Outer Box /	Bag	Inner Box	Outer Box
TO-220/F	200	10	2,000	5	10,000	135×190	237×172×102	560×245×195

/ TUBE

Package Type	Units					Dimension		(unit mm^3)
	Units/Tube /	Tubes/Inner Box /	Units/Inner Box /	Inner Boxes/Outer Box /	Units/Outer Box /	Tube	Inner Box	Outer Box