
н þ

/ Electrical Characteristic Curve

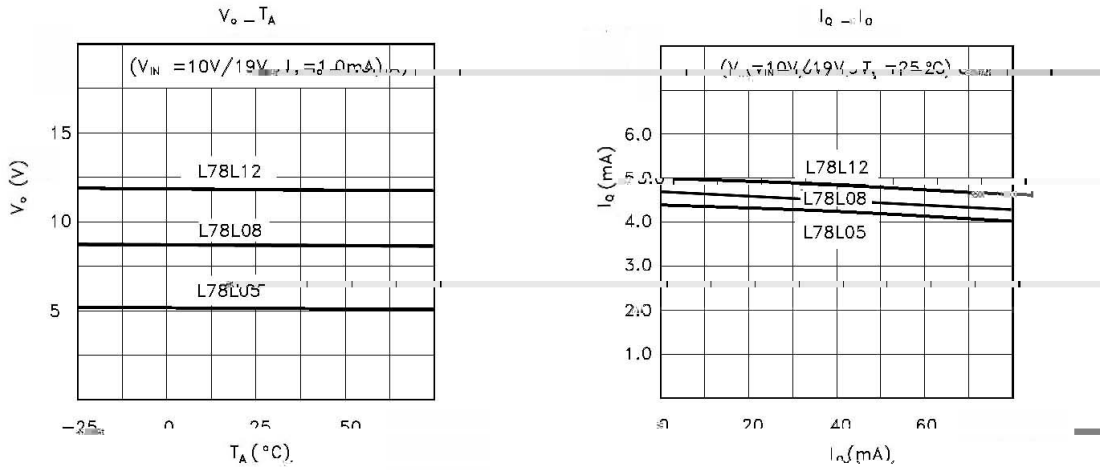

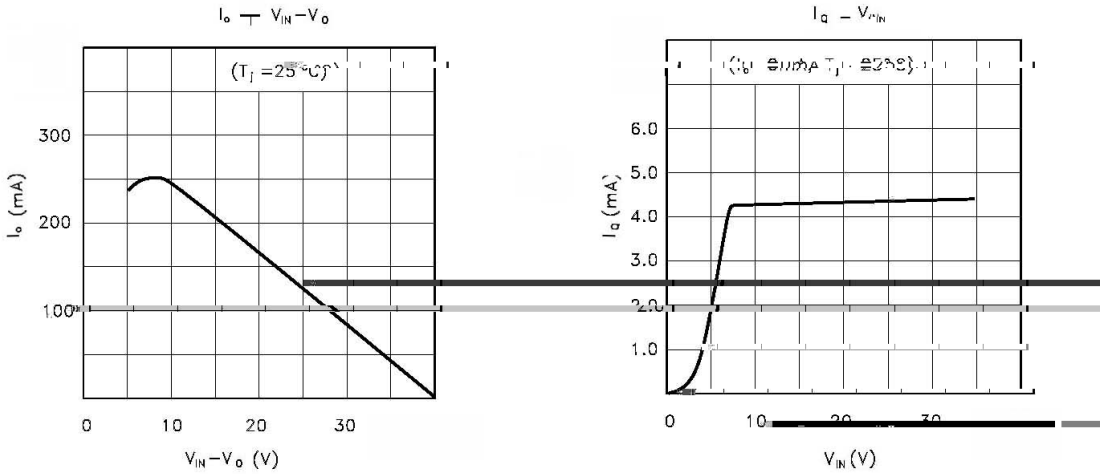

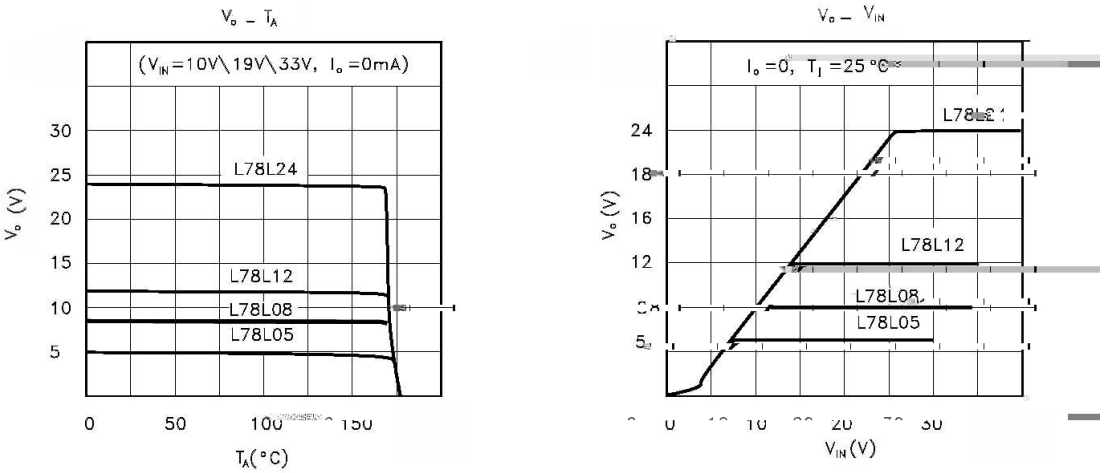

/ Package Dimensions

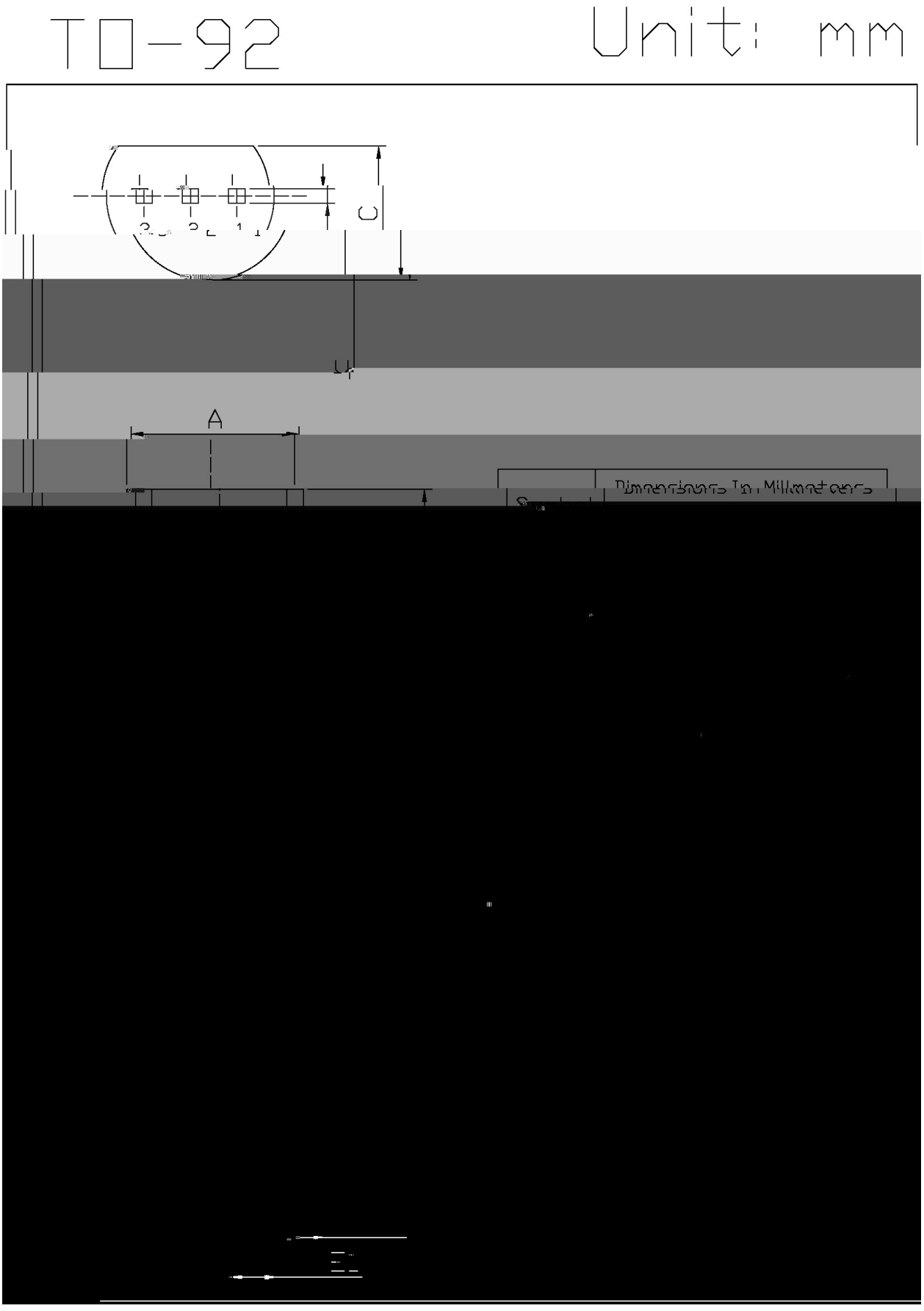

/ Marking Instructions

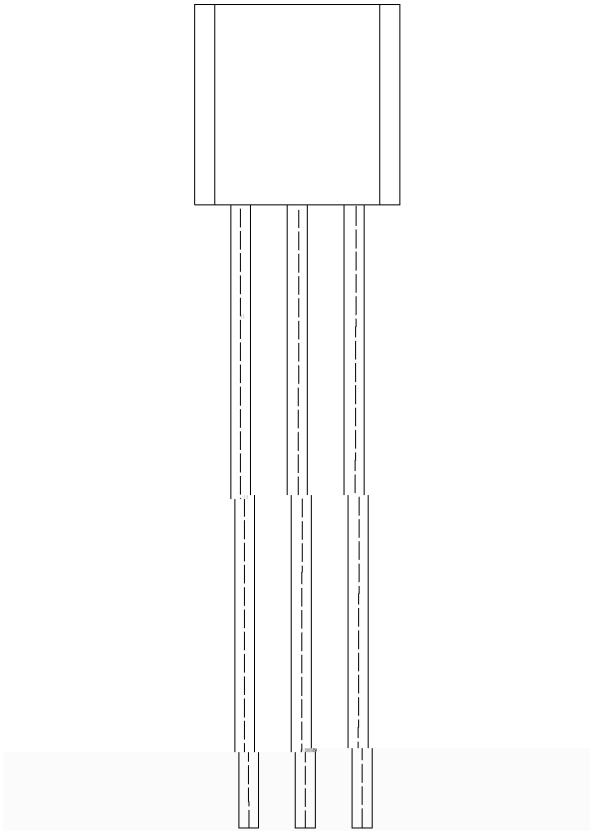

****

( ) / Temperature Profile for Dip Soldering(Pb-Free)

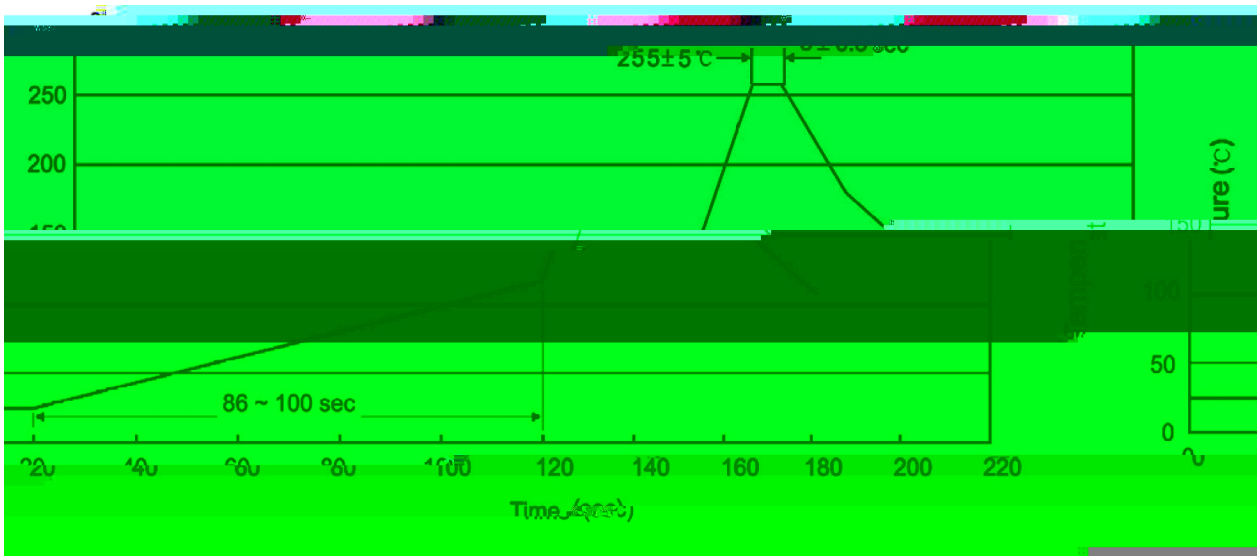

± ± ± ±

/ Resistance to Soldering Heat Test Conditions

± ±

/ Packaging SPEC.

	Units/Bag /	Bags/Inner Box /	Units/Inner Box /	Inner Boxes/Outer Box /	Units/Outer Box /	Bag	Inner Box	Outer Box
TO-92	1,000	10	10,000	5	50,000	135×190	237×172×102	560×245×195
	1,000	10	10,000	10	100,000	135×190	237×172×102	560×245×375

	Units/tape /	Tape/Inner Box /	Rows/Inner Box /	Inner Boxes/Outer Box /	Units/Outer Box /	Inner Box	Outer Box
TO-92	3,000	1	120	10	30,000	328×230×42	480×346×235 547×407×268

/ Notices