/ Descriptions

BRCL4058HMF-XX /

BRCL4058HMF-XX MOSFET

4.0/4.2/4.35V ISET

1/10 BRCL4058HMF-XX

BRCL4058HMF-XX 1 μA

/ Features

28V

15V

6.5V

800mA

1% 4.0/4.2/4.35V

MOSFET

SOT23-6

RoHS

/ Applications

/ Application Circuit

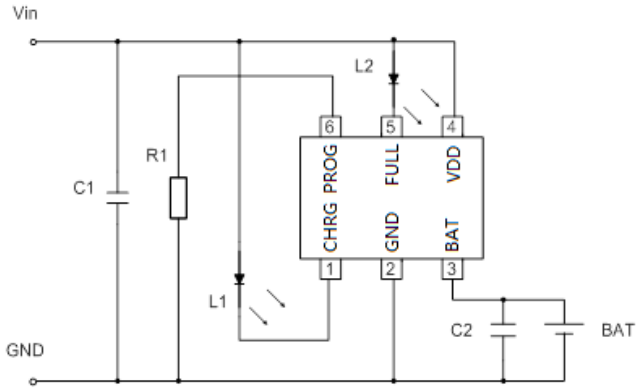

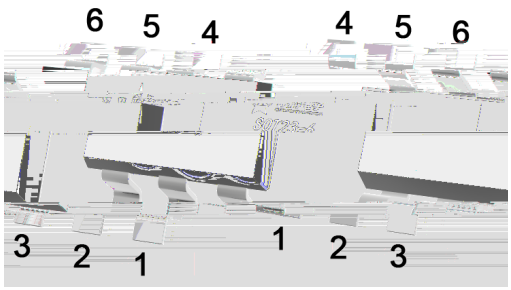

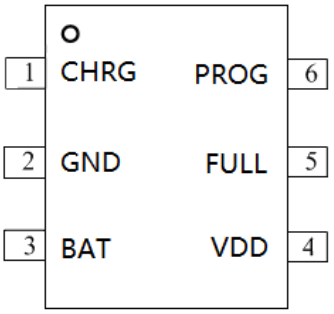

PIN Num.	Symbol	Function
1	CHRG	
2	GND	
3	BAT	
4	V_{DD}	
5	FULL	
6	PROG	

BRCL4058HMF-XX	
XX	4.0 4.0V

PARAMETER	SYMBOL	RATINGS	UNITS
Input Supply Voltage	V_{IN}	-0.3~28	V
BAT Pin Voltage	V_{BAT}	-0.3~15	
Other Pin Voltage	V_{Other}	-0.3~6.5	
Operating Ambient Temperature Range	T_A	-40~+85	°C
Junction Temperature	T_J	150	°C
Storage Temperature	T_{stg}	-55~+150	°C
Lead Temperature (Soldering, 10s)	T_{solder}	260	°C
ESD	HBM	2000	V
	MM	200	V
Continuous Output Current	I_O	800	mA

PARAMETER	SYMBOL	CONDITIONS	MIN	TYP	MAX	UNITS
Input Supply Voltage	V_{IN}		4.5	5.0	6.0	V
Input Power Supply Current	I_{IN}	V_{BAT}= V_{FLOAT}+0.1V		90		εA
Input Over-Voltage Protection Voltage	V_{ovp}	V_{IN} from Low to High		6.5		V
Input Over-Voltage Protection Voltage Hysteresis	φV_{OVP}			300		mV
V_{IN} Under Voltage Lockout Threshold	V_{UVL}	V_{IN} from High to Low V_{BAT}=2.7V		3.3		V
V_{IN} Under voltage Lockout Hysteresis	φV_{UVL}			100		mV
Regulated Output (Float) Voltage	V_{FLOAT}	I_{BAT}=40mA	3.96	4.0	4.04	V
			4.158	4.2	4.242	
			4.307	4.35	4.394	
Recharge Battery Threshold	φV_{RECHRG}	V_{FLOAT}-V_{RECHRG}		150		mV
BAT Pin Current	I_{BAT}	R_{ISET}=17k, Constant Current Mode		100		mA
		R_{ISET}=3.4k, Constant Current Mode		500		mA
		R_{ISET}=2.1k, Constant Current Mode		800		mA
		V_{BAT}= V_{FLOAT}, Standby Mode		2.5		εA
		Shutdown Mode (V_{BAT}=V_{FLOAT},RPROG not Connected / V_{IN}-0)		0.1		εA
		Battery Reverse Connection (V_{BAT}=-V_{FLOAT}, V_{IN}-0)		2		mA
Trickle Charge Threshold	V_{TRIKL}	V_{BAT} from Low to High		2.6		V
Trickle Charge Hysteresis	φV_{TRIKL}			200		mV
Trickle Charge Current	I_{TRIKL}			10		%I_{BAT}
Termination Current Threshold	I_{EOC}			10		%I_{BAT}
CHRG/FULL Pin Pull-Down Current	I_{CHRG}	V_{CHRG}=5V			5	εA
CHRG/FULL Pin Output Low Voltage	V_{CHRG}	I_{CHRG}=5mA			0.1	V
ISET Pin Voltage	V_{ISET}	R_{ISET}=10k, Constant Current Mode		1		V
VIN-VBAT Locking Threshold Voltage	V_{ASD}	V_{BAT}=3.6V V_{IN}:3.5V→4V				

/ Principle block diagram

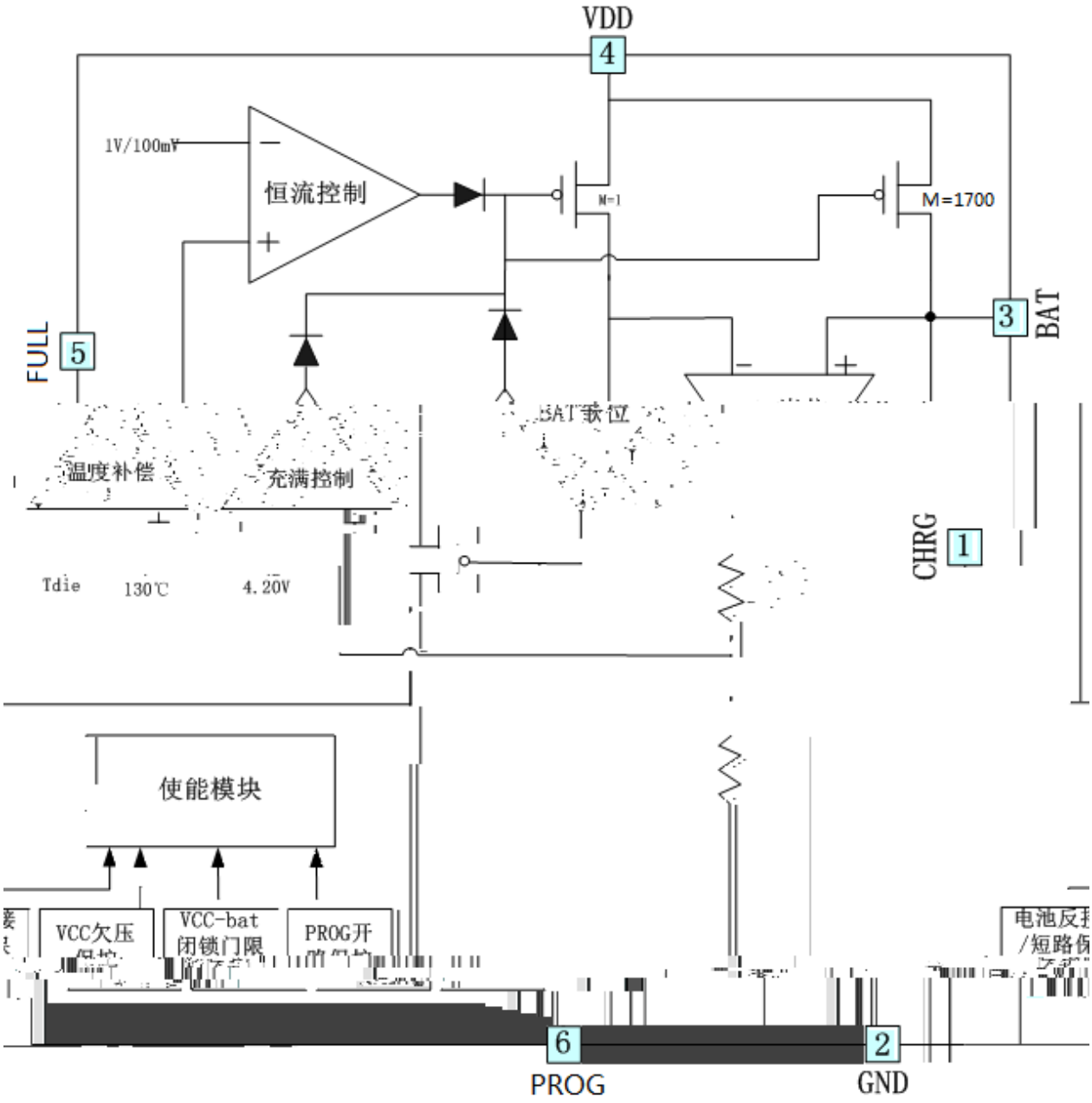

/ Function description

3.3V 6.5V IC BAT 2.6V
BRCL4058HMF-XX 1/10 ISET
BAT 2.6V CC
ISET BAT BRCL4058HMF-XX
CV CV 1/10

1/10
ISET ISET 100mV t_{TERM}
1ms

ISET

ISET
(VISET=1V)

$$I_{BAT} = \frac{1700 \times V_{ISET}}{R_{ISET}}$$

BRCL4058HMF-XX BAT
V_{FLOAT}-150mV 80% 90%

UVLO

VIN
UVLO UVLO VIN
110mV

BRCL4058HMF-XX

BAT GND 300mV BAT GND
80mV

/ Function description

CHRG FULL

BRCL4058HMF-XX CHRG FULL

CHRG FULL CHRG FULL

GND

	CHRG
VDD	

125

BRCL4058HMF-XX

BRCL4058HMF-XX

/ Package Dimensions

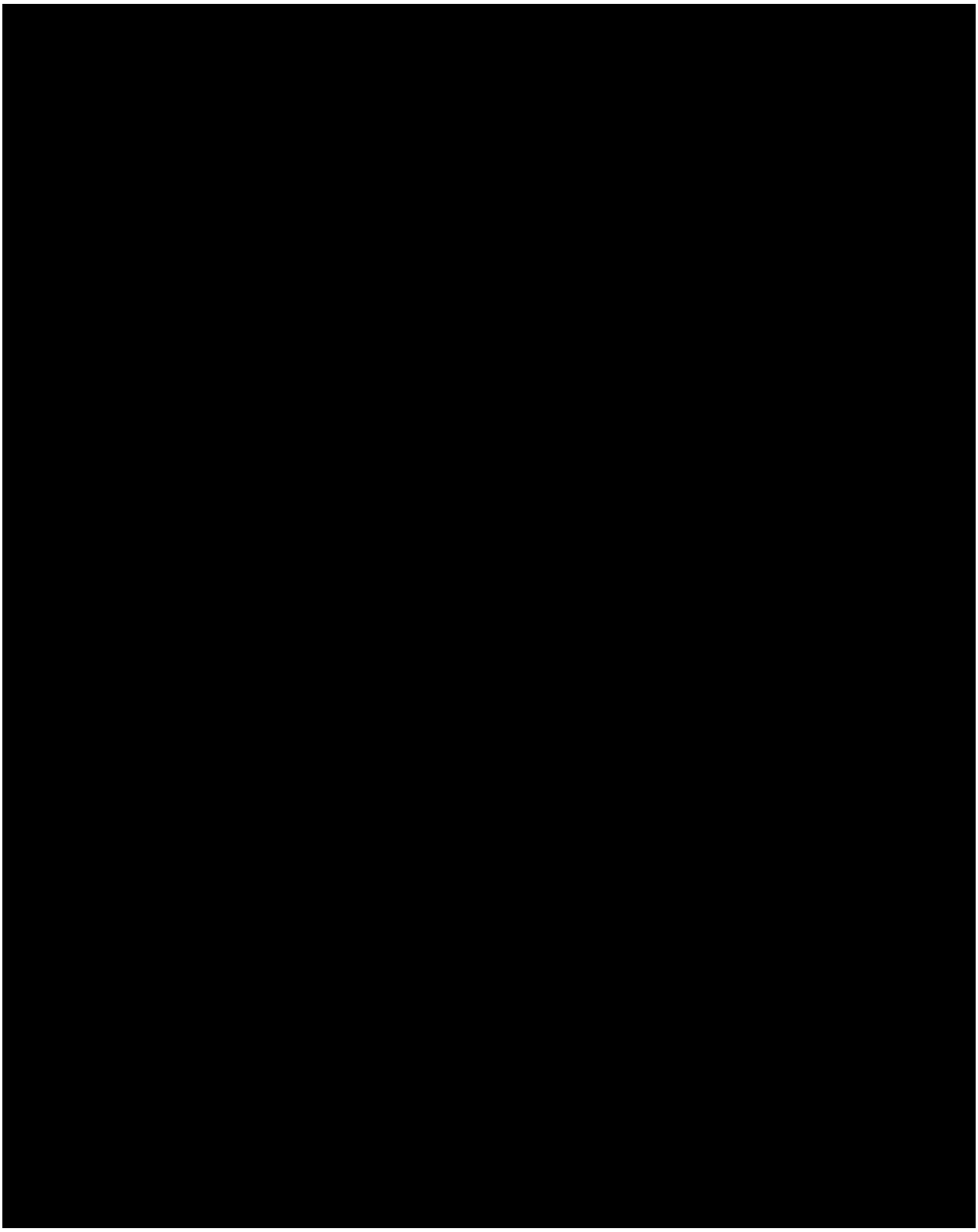

/ Marking Instructions

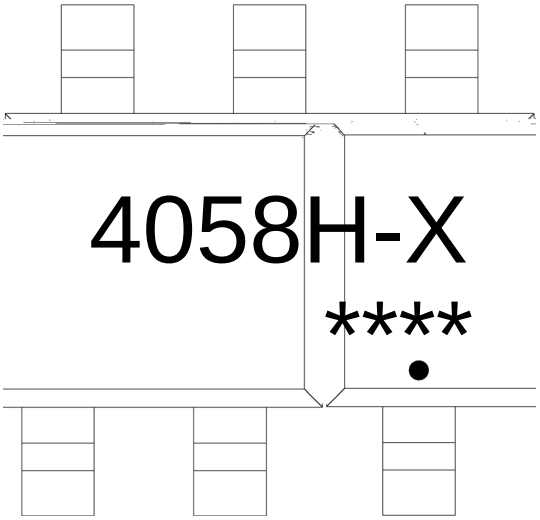

4058H

XX

****

BRCL4058HMF-4.0	4058H-40/****
BRCL4058HMF-4.2	4058H-42/****
BRCL4058HMF-4.35	4058H-435/****

( ) / Temperature Profile for IR Reflow Soldering(Pb-Free)

Note:

1.Preheating:150~180 , Time:60~90sec.

2.Peak T .:45