/ Descriptions

BRCL4058PZR-4.2 ĩ ₲ Ḣ ̃Ǫ Vِ ص ĭ ح ح ﻭ ă ů ح ớ Y ⅝ ` ̃ Ḍ ɔ − ɔ

BRCL4058PZR-4.2 پ ɾ ở ḧ ɔ ╚ / ở ḧ ɔ ɻ ớ í ـ ﻱ Ṉ ᵕ մh ţ ̈Ǫ ´ ệ BRCL4058PZR-4.2 ă ʁ ̈Ạ Ã Ẓ ɾ ⅞ ɲ ỳ J̈ ̈O ψ ̀H گ USB ɔ ◊ گپ ɔ ◊ Ṫ

BRCL4058PZR-4.2 پ ɾ մhPMOSFET " ═ ɾ i گ ɔ ت ̈A j ـ ļ ᵕ մh ₅ ╝ ɔ گ ڭ ̃ ╢ ٦ ♬ ɨ Ḿ ɔ ɔ ╚ ف Φ ₅ ט ذ ` ɱ ᶻ ı ' ̃Ḥ ă ح ע ᴸ □ ẙ ţ ţ ï Ḿ ƀ Ɑ □ ẙ ɾ ں ◗ ɔ ɖ ḧ 4.2V ɔ ɔ ╚ ن ص PROG ů ᵕ ɻ ɔ گ ذ ` ﻭ ح ڑ 1.0A

Ẹ ژ ɔ ɑ ũ ὲ ̀H BRCL4058PZR-4.2 ₅ ט ف Ḥ ɔ ╚ ↑ õ ɔ − ◖ ɔ ╚ ɱ 2μA ï BRCL4058PZR-4.2 Ʊ Ḛ ≠ ᴾ ὺ ɔ ɔ ╚ ˇ í ژ ص ï ڎ ڃ ₅ ʊ W ɔ ƀ ɾ ̃Y˜ ɔ ɻ ژ ɔ ì ↑ õ Ậ ő

BRCL4058PZR-4.2 پ ɾ ﾉ ً ע DFN Ṃ Ƀ ﻭ Ṉ 6 ᵕ ɱ ţ ũ ᾧ ṇ ɔ ت PCB ų — Ⅵ ژ BRCL4058PZR-4.2 Ṫ -40¯C to +85¯C

/ Features

- ﻭ ح 36V ژ ɔ 6.1V ص ï
- ɻ ů ز 1% 4.2V Ỉ ₰ ɔ ﾉ ₿ ɔ
- ɔ − ì ï
- ʊ ũ BAT-VDD گ ı ĩ
- ể ɔ ╚ <2μA
- ₩ Ã ï ı ắ 55μA
- ̃Ḥ ̇Y 0V ɔ − ɔ
- ﻭ ᶻ 1.0A ɻ ớ ɔ ɔ ╚
- ╚ / ở ╚ / ở s ɟ Ã ɔ
- ɔ ɔ ╚ ᵕ մh ذ
- ɔ ɔ ╚ ú ĩ ♬ ذ `
- ɻ ט ں ⫞ ⫫ ɔ ╚
- ₅ ʊ W ɔ
- ɔ ↑ õ ˜Y˜
- ɻ RoHS‰ ḷ

/ Applications

- ヽ ט ɔ ʕ SGDs P S6 ̇Ḥ ᾧ
- XVE ̈Ǫ ̃Ω
- Ⓦ Z V ắ ɔ
- ɔ − ɔ ɔ ت
- Ʊ Ḛ ὲ ̇Y ₰ ᵻ

/ Application Circuit

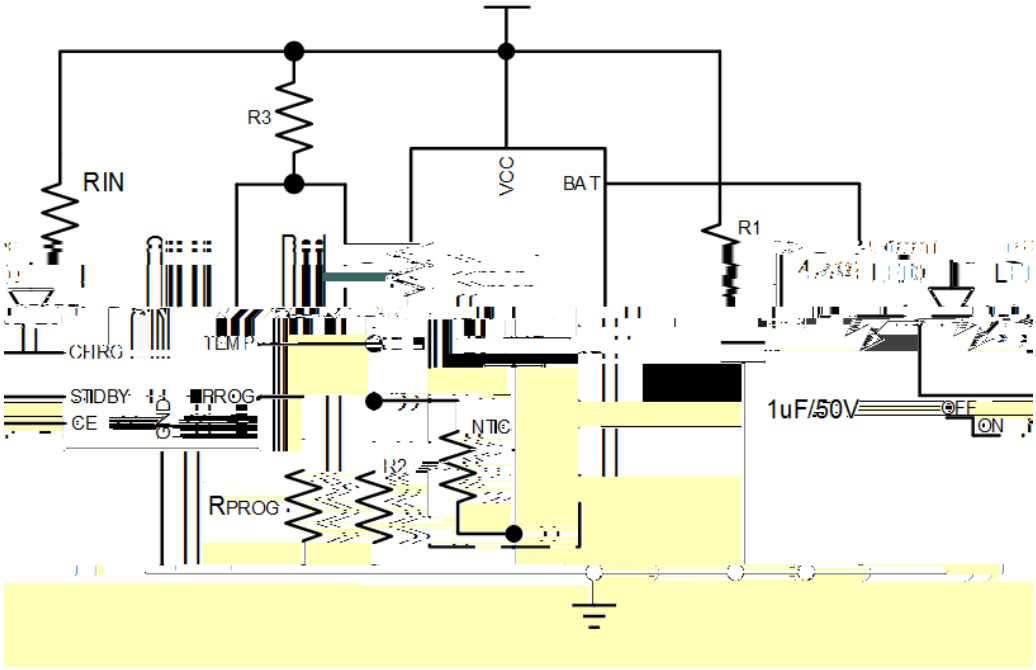

├4χ Ẹ ⅄ ⌊ ƀYFF ⅄ ⅂ ɔ ḳ ⅄ ḧYFF ɔ ̀H ⅄ ⌊ ƀ ɔ ḳFLQ i ỉ 71:Ω ṫ ⌧ ɔ ڳ گ ₿ ⅋ ȧ ö ̀HYFF ⅄ ⅃ ⅃ ⅃ ɔ ψ

├5χ ẸFHẬ ǒ j ⅂ PFX í ̀H ⌴ ṄFHẬ ǒ Ừ ⅄ ǎ ì JQG EUF0738;S]U0715 ʃ * Ẃ ṫ ↑ ỗ j ṄFHẬ ǒ ́ ì ì YFF

/ Pinning

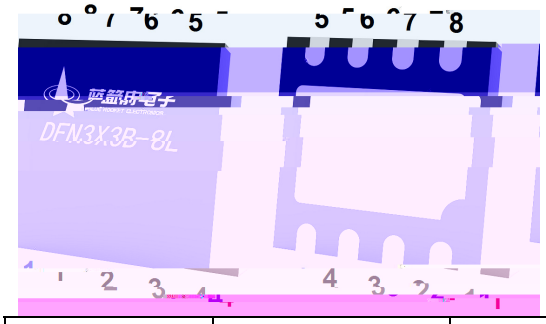

PIN Num.	Symbol	Function
1	TEMP	ɔ ɔ – □ ẙ ₅ ⅃ ⅄
2	SURJ	ɔ ɔ ⅃ ɔ ̃Ǫ ⅄ ᵘ ⅃ ɔ ڳ JQG ɔ ̀ ɔ ɔ ⅃ ⅋ ṇ
3	GND	ᵇ ɑ ş
4	VCC	ɔ ◊ ⅄ ⅄
5	BAT	ɔ – ⅄ ⅄
6	STDBY	Ầ ◖ ⅄ ⌧ ɔ Ḣ ǎ ̈Y˜ ⅄
7	CHRG	Ầ ◖ ⅄ ⌧ ɔ ↑ ỗ ̈Y˜ ⅄
8	CE	ỉ́ ⅄ ⅄ Ḥ ɔ Ẉ ỉ́

PARAMETER	SYMBOL	RATINGS	UNITS
VCC Pin Voltage	V_{VCC}	-0.3~36.0	V
BAT Pin Voltage	V_{BAT}	-4.2~18.0	
CHRG/STDBY Pin Voltage	$V_{CHRG/STDBY}$	-0.3~13.0	
PROG Pin Voltage	V_{PROG}	-0.3~5.5	
Other Pin Voltage	$V_{TEMP/GND/CE}$	-0.3~5.5	
Operating Ambient Temperature Range	T_{OP}	-40~+85	°C
Storage Temperature	T_{stg}	-65~+150	°C
Lead Temperature (Soldering, 10s)	T_{solder}	260	°C
ESD	HBM	4000	V
	CDM	1000	V

PARAMETER	SYMBOL	CONDITIONS	MIN	TYP	MAX	UNITS
Input Supply Voltage	V_{CC}		4.5	5.0	36.0	V
[redacted]		Charging mode				
Regulated Output (Float) Voltage	V_{FLOAT}	0 ≤ T_A ≤ 85 , R_{PROG}=1.02k	4.158	4.2	4.242	V
BAT Pin Current	I_{BAT}					

PARAMETER	SYMBOL	CONDITIONS	MIN	TYP	MAX	UNITS
V_{CC} Under voltage Lockout Hysteresis	$V_{CC\_UV\_HYS}$		100	200	300	mV
V_{CC}-V_{BAT} Lockout Threshold	V_{ASD}	V_{CC} from Low to High	100	125	150	mV
		C/10 ons antr V_{CC} from High to Low	30	65	100	mV
C/10 Charging Termination Current RPROG	I_{TERM}	R_{PROG}=1.02k	90	100	110	mA

/ Principle block diagram

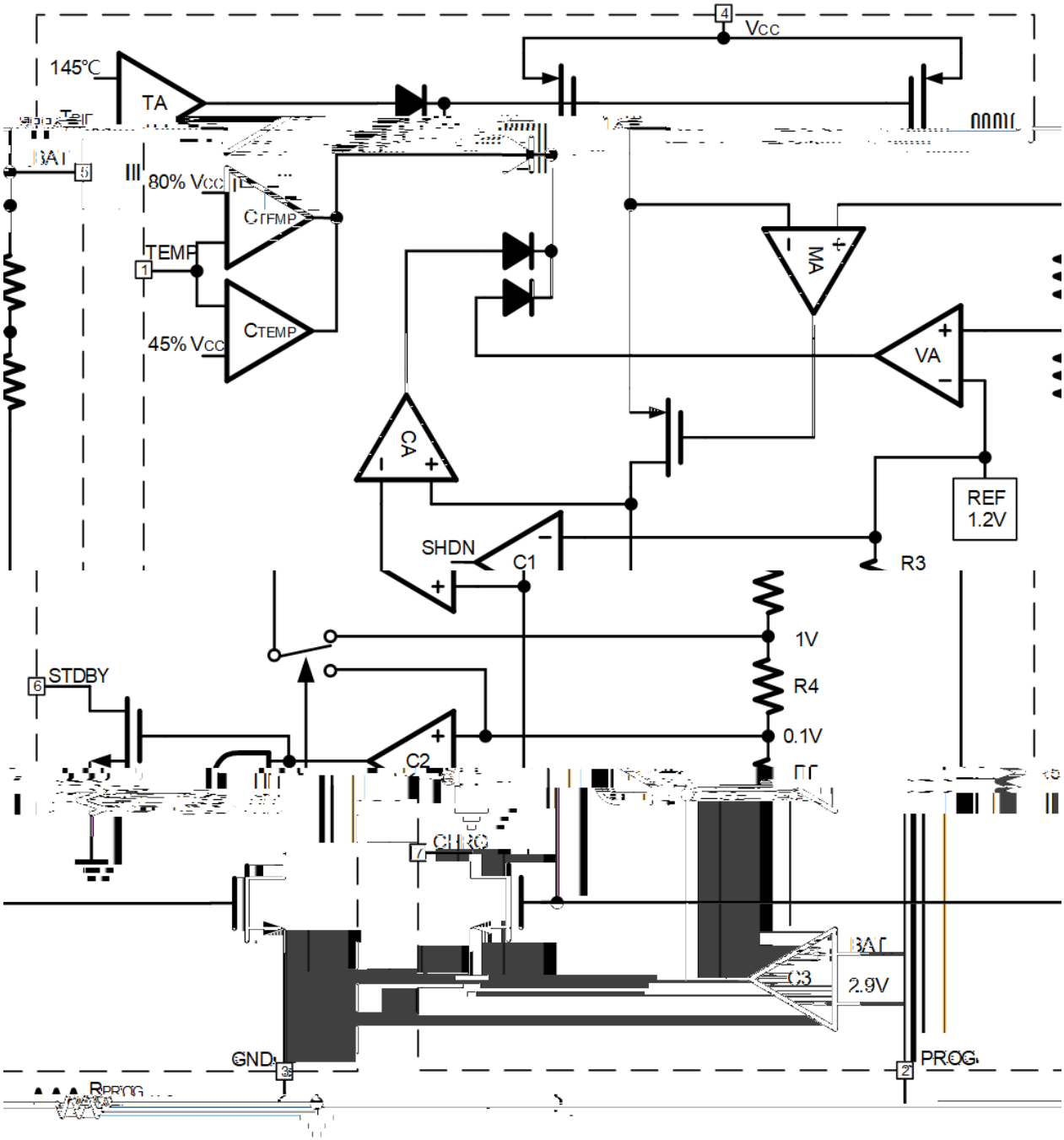

/ Function description

◆

Ę ɔ ɔ ╚ ɒ ɾ ѡ ∤╟ ɔ ѕ₆ ϕ ħ 1/10`H ɔ Ỉ ע q ∤ Ƀ Ỉ ţ ĩ ן ص پ ۲ ىh ▾ └ ⅝ ۍ ḾPROG Ậ ő ف Φ ˇ í ׳ ₅ ╝ Ę PROG Ậ ő ɔ ѕ₆ 100mV ï `H ژ ٨ ص tTERM ε ˇ ₥ 1.8ms ζ `H ɔ q ∤ Ƀ ɔ ɔ ╚ q ԋ Ă BRCL4058PZR-4.2 ف ể ₩ Ã %`H ژ ɔ ◊ ɔ ╚ ѕ₆ 55μA ε ├ χ C/10 ∤ Ƀ ɒ ╚ ɔ ♬ ں ₩ Ã ¸ ѽ ζ

ɔ `H BAT Ậ ő i Ψ ق ذ PROG Ậ ő ɔ ɒ DC ɔ ɔ ╚ ѕ₆ ϕ ħ 1/10 ژ ˜ ṗ ş ѕ₆ 100mV ï ∤ Ƀ ⅝ ۍ i 1.8ms ▾ └ `H ژ ε tTERM ζ ف ٢ ό و Ψ ق ذ j Ṁ ɔ Ỉ ע ص ́E ∤ Ƀ ñ Ẉ ẓ ɔ ɔ ╚ ѕ₆ ϕ ħ 1/10 ï BRCL4058PZR-4.2 o ∤ Ƀ ɔ Ỉ ע Ẋ Ƀ ن ص BAT Ậ ő ώ ɔ ╚ ɒ ف ٢ ↑ õ ï BAT Ậ ő i ¨A ѽ ق ذ ʠ u ọ ء ۰ ɔ –׳ ɔ

ɒ ể ₩ Ã BRCL4058PZR-4.2 ḾBAT Ậ ő ɔ ف Φ ف ∤ ˇ í ḅ ' Ỉ Ậ ő ɔ ں 4.05V W ɔ ɔ ڈ ں ε VRECHRG ζ ï ɔ Ỉ ע À Ḋ Ẋ W Ⱪ ɔ – Ẓ ɔ ╚ Ę ɒ ể ₩ Ã ف Φ ɔ Ỉ ע é ʊ W ʊ `H ọ ء Ă À ژ ɔ ł W ۔ A ì ژ ɔ ã ä ن ص í PROG Ậ ő׳ ԋ Ă ɔ ł W ʊ ï g˜ Ɛ ʒ ɔ Ỉ ע ↑ õ g

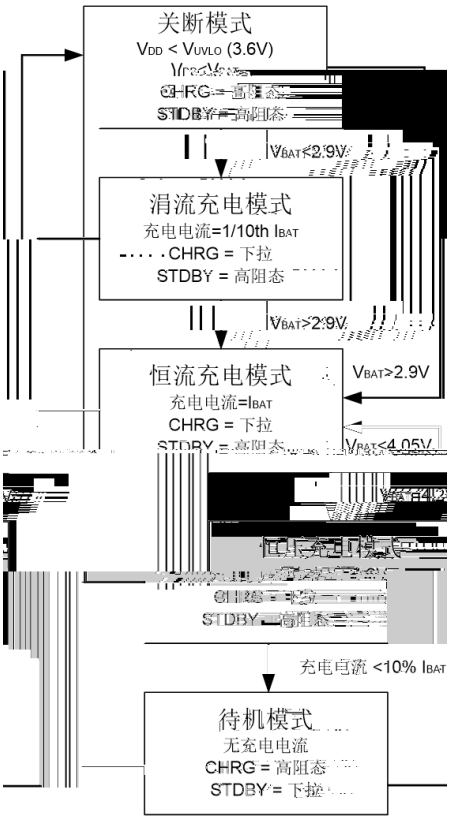

◆

BRCL4058PZR-4.2ؤ ă ѣ Ầ ◖ ژ ⌧ ↑ õ ˝Y˜ Ậ ǘ CHRG STDBY Ẹ BRCL4058PZR-4.2 ʃ
ɔ ↑ õ ̀H CHRG ژ ï ˜I Ʊ Ę̌ ↑ õ CHRG ژ ح ڳ õ ɔ Ḣ ă ̀H STDBY ژ ï ˜I Ẹ ɔ
– ì ã̃ ɔ – □ ỷ ầ Ẃ ̀H CHRG STDBY ɥu ژ ح ڳ õ
Ṅ TEMP Ậ ǘ ì ş ɯ ڎ ɔ – □ ỷ ˘ ⅃ ı ǐ ḅ ' BAT Ậ ǘ ì 10µF ɔ ḳ Ẋ ɔ – j ف ì ʌ
˘ LED ѣ ʌ˘ LED Ṅ 1-4s⌧ Ω ڎ ♣

ɔ ↑ õ	ʌ˘ OHG FKUJ	ʌ˘ OHG VWGE\
ɔ		ȯ
ɔ ʌ Ƀ	ȯ	
ڎ ڄ ɔ – ì ɔ – ' ف ì ã̃ ɔ – □ ỷ ầ Ẃ	ȯ	ȯ
EDW Ậ ǘ ì 43u I ɔ ḳ ɔ – ' ف ì +WH P S= J QG,	ʌ˘ OHG ѣ ʌ˘ OHG Ṅ 407s⌧ Ω ڎ ♣	

◆

ḅ ' ɔ̀ ɑ □ ỷ ح ǐ ɸ 145 ɯ ♬ ت لا ث Ṅ ṇ ɔ ɔ ⅃ ǐ ı ǐ گ Ƀ
BRCL4058PZR-4.2ص ♬ Ẋ ḇ ɾ ̈A ώ ح ʌ ḣ ɔ ث — ı ' ʃ ת ǐ ⌧ i ں ã̃ ≡ ω̃ ̈Ω q
BRCL4058PZR-4.2⌧ l ɔ̀ ḇ - ɔ Ṅ ḇ ω q ừ ï ɔ ʊ ṇ ɔ ⅃⌧ ώ ï ⁞ ̃Ω Ɛ ʒ ε ã̃ j
ĩ ω q ừ ζ ע ˪ □ ỷ ʃ ɸ ḣ ɔ ɔ ⅃

◆

ѭ گ Ƀ □ ỷ ص ح ã̃ ã̈ ص Ḥ Ḿ ɔ – چ ă ⌧ ̈Ω ḱ BRCL4058PZR-4.2 ɯ ؤ ă ω̃ ɔ – □ ỷ ˘ ⅃ ɔ
ث ɔ – □ ỷ ˘ ⅃ ĩ ن ص ⅃ ۽ TEMP ʅ ǘ ⌧ ɔ ḫ א ⌧ TEMP ʅ ǘ ⌧ ɔ ĩ ˖ ɔ – ⌧ NTC

/ Function description

◆ **R1 R2**

ѭR1 R2 ļ ⁞ ℨ ɔ − □ ỷ ˇ ⅌ ƀ ♬ ѽ ɔ ɕ ɔ ɕ ⁋ . ḧ Φ ก ↑

ϕ ϕ ḧ ɔ − □ ỷ ƀ ѭTL~THΦ TLωTH)ψ ɔ − ɤ ĩ ق □ ỷ ㇻ ℨ ♬ ѽ ɔ ɕ YNTCΦΦRTLѭ Ʊ ƀ □ ỷ TL`HɕΦRTH ѭ Ʊ ƀ □ ỷ TH`Hɕ Φ RTL RTHΦ ₒ Φ ƀ □ ỷ TL`HΦ TEMP ㇻ ɔ ѭ χ

$$VTEMPL = \frac{R2||RTL}{\quad\quad} VIN$$

ƀ □ ỷ TH`HΦ TEMP ㇻ ɔ ѭ χ

$$VTEMPL = \frac{R2||RTH}{R1 + R2||RTH} VIN$$

ɨ Φ

$$VTEMPL = VHIGH - k2 \times Vcc(k2 = 0.8)$$

$$VTEMPH = VLOW + k1 \times Vcc(k1 = 0.45$$

ɹ ê χ

$$R1 = \frac{RTL \times RTH(k2 - k1)}{(RTL \cdot RTH)k2 \times k1}$$

$$\frac{RTL \times RTH(k2 - k1)}{\quad\quad}$$

ת Φ ƀ ' ɔ − ժ ĩ* □ ỷ ㇻ ℨ Y PTCΦ ♬ ѽ ɔ ɕ Φ Φ ă 2

$$R1 = \frac{RTL \times RTH(k2 - k1)}{(RTH - RTL)k2 \times k1}$$

$$R2 = \frac{RTL \times RTH(k2 - k1)}{\quad\quad}$$

ϰ i ˌ ò Ṁ ˜ Φ ể ϕ ḧ □ ỷ ƀ ת ɔ ◊ ɔ Vcc ĩ ṇ ԋ Φ תR1 R2 RTH RTL õ ԋ ψ Ʊ ΦRTH RTL ɳ ⃞ ʃ ԋ ɔ − ė q ă ɳ ⃞ ƀ ⅌ ⅄ : ê

ƀ ƀ ᏦẔ ɤ Φ Ɣ ԋ ≈ • ㇻ □ ỷ ᵉ ớ Φ R2 j ɤ Φ R1 o R1 ò Ṁ ψ ê ⅄ Φ

◆ **ΠUVLO**

ժ ڎ ڃ ɔ ت ا ڑ ɔ ڤ Φ ˇ í ΦẊ VCC ₆ ڎ ڃ ڈ ں i ɔ ' Y ƀ ₩Ã UVLO ɔ ت Ṅ ɔ ' Y ƀ ₩Ã ƀ ' UVLO⅝ ڍ ɨ ب Ψ Φ ƀ VCC ₆ ⅝ ɔ − ɔ ڃ 100mV ɔ Ṅ j ҍ گ ₩Ã

/ Function description

◆

ñ ɔ Ỉ ע q ﻯ Ⱥ BRCL4058PZR-4.2 ٧ o ﭙ ɾ τ ω 1.8ms ▾ ᒐ H ڑ ⅝ ۍ ˡ ḾBAT Ậ ŭ i ɔ ڤ Φ ف ﻯ ˇ í Ę ɔ – ɔ ص 4.05V ε ᶻ ₇ Ḿ Ẓ ɔ – ķ ۍ 80% ₆ 90% ζ ï ᒐ ɔ Ỉ ע ﭙ Ȁ Ậ Ḋ ف ɔ – q ﻯ ᒐ Y ƥ ε ã ì ġ ζ ◗ ɔ ↑ ő Ẋ ﻁ ڤ Φ Ω ớ ɔ Ỉ ע ט ﷺ ɹ ƥ W ɔ Ỉ ע ص ١ CHRG Ậ ŭ ڑ ڤ ï ˜ I ↑ ő

◆

ɻ ɔ – ﻝ ɔ ڑ ٧ ˜ ف ở ħ ɔ ₩ Ã ɪ ע ت ő ĺ ᶻ ƥ ˈ ﭙ ɾ ᵘ ሀ ɔ ķ ﷺ ừ ï ᒐ Y ٧ ħ ƥ ≡ ω ì ɔ – ᒐ H ₩ ɳ ﻯ ᒪ ɔ á ɲ ﭙ ɾ ڑ ɔ ķ Ẹ ﭙ ɾ ᶻ Ợ ﷺ Ḥ ESR ﻫ ɔ ķ ᒐ H á ɲ ᶣ ɾ ﻝ ɔ ķ Ỉ ﷺ 1Ω ɔ ﮓ ƀ ˈ ɾ ɔ ķ j ɹ ɻ Ỉ ɔ ﮓ

ƥ ở ħ ɔ ╚ ₩ Ã ɥ ɪ ע ت ﷺ ĩ PROG Ậ ŭ ă j ĩ ɔ – ở ħ ɔ ╚ ₩ Ã ﷺ ٧ ħ ớ ᴘ PROG Ậ ŭ ﮓ i ﷺ ẽ Ę PROG Ậ ŭ i ≡ ω ﮓ ɾ ɔ ķ RPROG J̌ Ỏ ح ڑ 20kΩ ᒐ H ɔ ٧ ħ ɨ ă PROG ` ᴇ ﷺ ɨ ᵘ ɔ ķ ɲ ɸ ħ ɔ ﮓ ﷺ ω ᶻ ķ ƥ ﮓ PROG Ậ ŭ i ﷺ ‖ ᴇ ļ ' Ẓ ᒐ Y ƥ 100kHz i % ƀ ' PROG Ậ ŭ è ƥ ķ ớ ق ɔ CPROG ﭙ ɾ ï Ã ʃ ɯ ٧ RPROG ﷺ ω ᶻ ɔ ﮓ χ

$$R_{PROG} \leq \frac{1}{2\pi \cdot 10^5 \cdot C_{PROG}}$$

ɾ Ȁ ˜ ỵ G ﻍ ﷺ ĩ ɔ ɔ ╚ ă j ĩ ˀ õ ɔ ╚ ƀ ƀ ˈ ظ Φ ƥ Ḥ ɔ ╚ ₩ Ã ﷺ Â ɦ ɔ ◊ ﻝ ɔ – Ẋ ỉ ᴋ BAT Ậ ŭ ╚ ﷺ Ẉ ẓ ɔ ╚ ụ Ẃ ⅝ õ ɔ ╚ ỉ ˙ ˜ ɾ ﭙ ɻ ƥ ف ٧ ʃ ƥ PROG Ậ ŭ i ﭙ ɾ ٧ ﷺ RC ▾ ᒪ ɾ ‖ ﷺ Ẉ ẓ ﷺ ɔ – ɔ ╚ ε ƀ ï g Ȁ ˜ ζ ƥ PROG Ậ ŭ ▾ ᒪ ɔ ķ ڑ ɯ ɸ 10k ﷺ ɔ ﮓ . ٧ ħ ớ

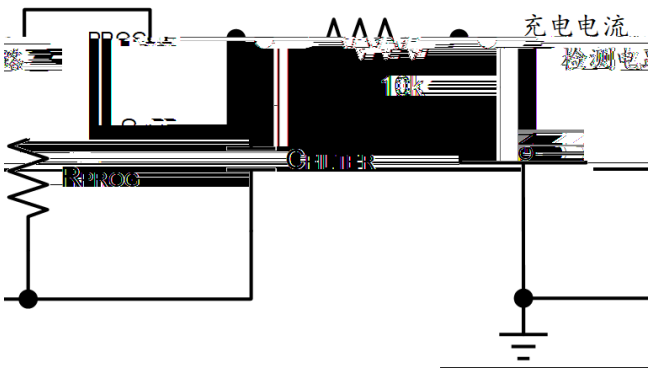

◆

ƀ Ɑ ﻝ □ ˚ ע ᴸ □ ỷ PCB ụ ṕ ق ɔ Ṃ Ꝉ ɿ ʒ ٧ ^ ٧ ﻯ ⁞ ˜ Ω PD ﻝ □ ˖ ï Ã ∂ ê χ

$$T_J = P_D \times \theta_{JA} + T_A$$

/ Function description

◆

ᅵ ớ ɔ IC⃞ ı ' ̈Ω ǟ PD ǯ ʅ ᅵ Ṯ ε V_{IN}-V_{BAT} ζ ɔ ɔ ╙ ε I_{CHG} ζ ˜ ḧ :

P_D= ε V_{IN}-V_{BAT} ζ *I_{CHG}

Ẹ ɔ – ɔ ᴗ Ḥ ε ḅ 3.6V ζ ̀H Ṯ ᴗ ᵹ ǰ ɸ ɔ ╙ ɔ ٣ ♬ Ɛ ᴗ

Ẹ ɔ – ɔ ᴘ ε ḅ 4.0V ζ ̀H Ṯ ṇ % ̀H ṇ Ẅ ᵘ ᵹ ɔ ╙ ε 5%~10% ζ Ҡ ̀Y PD ƿ

ᴛ ƿ ώ ᴘ ̃Ω ̃ω ' ɔ ᵻ ẙ

/ Package Dimensions

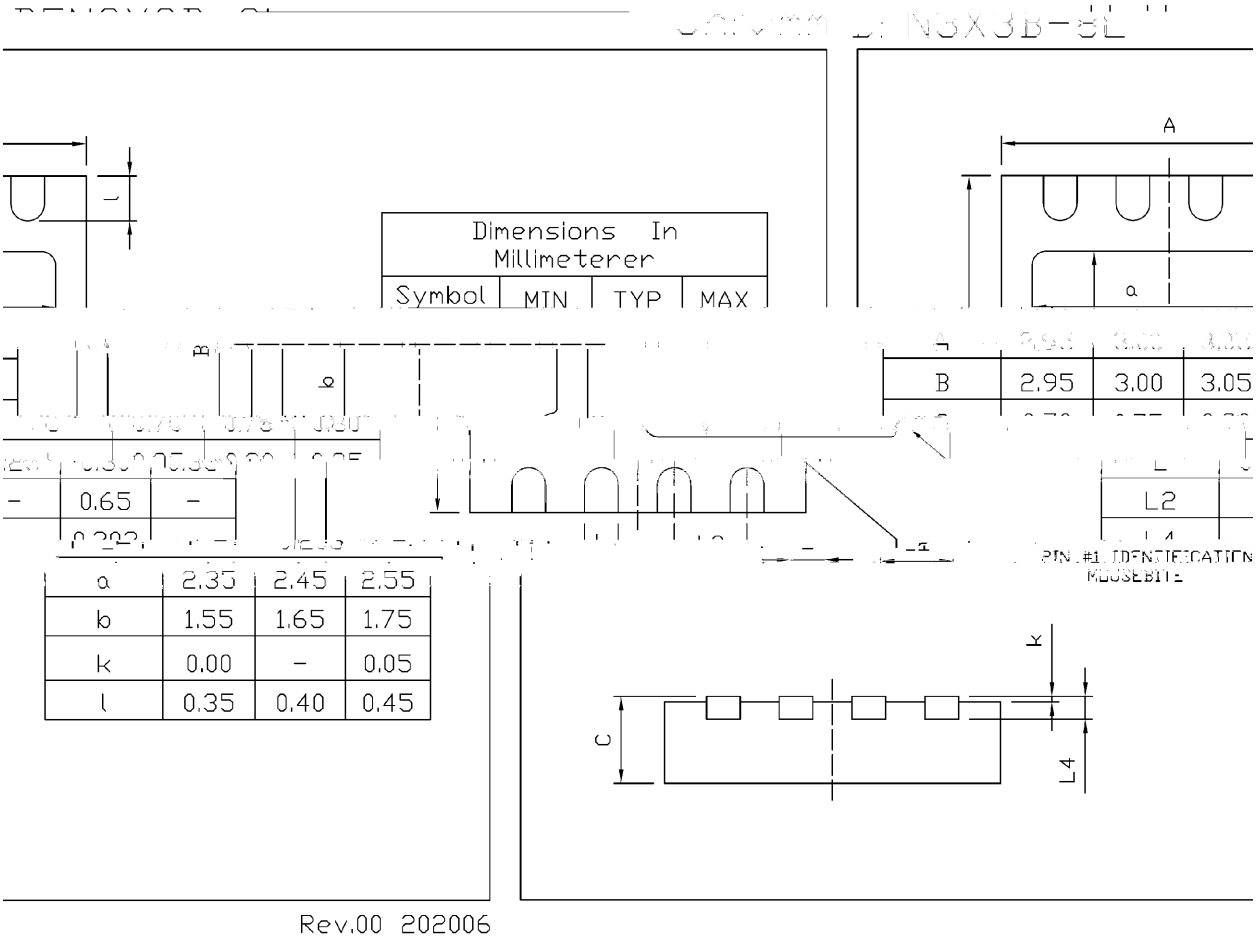

/ Marking Instructions



ب ˝ χ

EU χ ⌘ И .

738 ; S χ ⌘ ʒ N .

75 χ ´ ڑ ɔ 715Y

---- χ ⌘ ɨ ŋ̈ N . ɐ ɨ ŋ̈ N ψ

( ) / Temperature Profile for IR Reflow Soldering(Pb-Free)

ب ˝ χ

1 أ ♬ □ ỷ 150 180 `H ژ 60

Note: