BRCL4079ZR-4.2

BRCL4079ZR-4.2 /

BRCL4079ZR-4.2 USB

BRCL4079ZR-4.2 PMOSFET

4.2V PROG 1.0A

BRCL4079ZR-4.2

ẓ ɤ ⸗ ɛ / Application Circuit

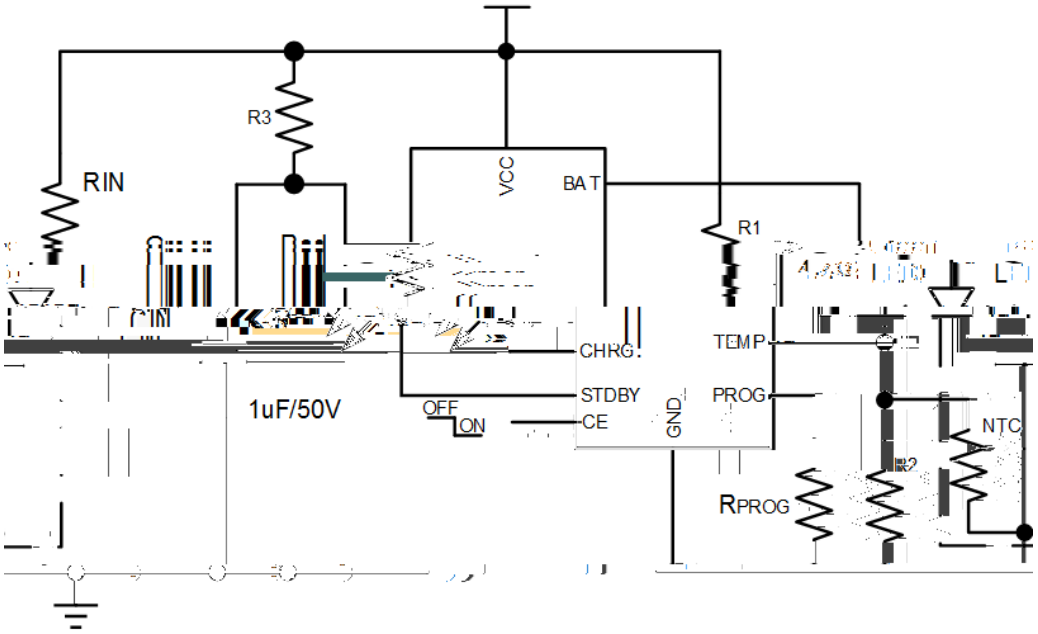

1	VCC	VCC	CIN	4.7Ω	VCC		
2	CE	MCU	CE	GND	BRCL4079ZR-4.2	CE	VCC

ã ⅄ / Pinning

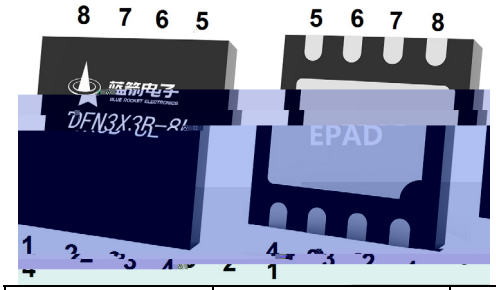

PIN Num.	Symbol	Function
1	TEMP	
2	PROG	GND
3	GND	
4	VCC	
5	BAT	
6	STDBY	
7	CHRG	
8	CE	
EPAD	GND	

ώ ̈ Ξ ̃Ạ / Absolute Maximum Ratings(Ta=25)

PARAMETER	SYMBOL	RATINGS	UNITS
VCC Pin Voltage	V_{VCC}	-0.3~36.0	V
BAT Pin Voltage	V_{BAT}	-4.2~18.0	
CHRG/STDBY Pin Voltage	$V_{CHRG/STDBY}$	-0.3~13.0	
PROG Pin Voltage	V_{PROG}	-0.3~5.5	
Other Pin Voltage	$V_{TEMP/GND/CE}$	-0.3~5.5	
Operating Ambient Temperature Range	T_{OP}	-40~+85	°C
Storage Temperature	T_{stg}	-65~+150	°C
Lead Temperature (Soldering, 10s)	T_{solder}	260	°C
ESD	HBM	2000	V
	CDM	1000	V

≠ Λ Ξ ̃Ạ / Electrical Characteristics(V_{CC}=5V,V_{BAT}=3.6V,Ta=25)

PARAMETER	SYMBOL	CONDITIONS	MIN	TYP	MAX	UNITS
Input Supply Voltage	V_{CC}		4.5	5.0	36.0	V
Input Power Supply Current	I_{CC}	Charging mode (R_{PROG}=1.0k)		260	360	μA
		Standby mode, charging terminated		180	300	μA
		Shutdown mode (R_{PROG} not connected, V_{CC}<V_{BAT},or V_{CC} V_{UV})		180	300	μA
		OVP mode(V_{CC}=30V)		180	300	μA
Regulated Output (Float) Voltage	V_{FLOAT}	0 ≤ T_A ≤ 85 , R_{PROG}=1.0k	4.158	4.2	4.242	V
BAT Pin Current	I_{BAT}	R_{PROG}=1.0k Current mode	855	950	1045	mA
		Standby mode, V_{BAT}=4.2V	0	-2.5	-6	μA
		Shutdown mode (R_{PROG} not connected)		± 1	± 2	μA
		Sleep mode,V_{CC}=0V		-1	-2	μA
Trickle Charge Current	I_{TRIKL}	V_{BAT} V_{TRIKL} R_{PROG}=1.0k	62	95	128	mA
Trickle Charge Threshold	V_{TRIKL}	R_{PROG}=1.0k V_{BAT} from Low to High	2.3	2.5	2.7	V
Trickle Charge Hysteresis	V_{TR_HYS}	R_{PROG}=1.0k	120	160	200	mV
V_{CC} Under Voltage Lockout Threshold	V_{CC_UV}	V_{CC} from Low to High	3.5	3.7	3.9	V

BRCL4079ZR-4.2

1/10

PROG PROG 100mV t_{TERM}

1.8ms BRCL4079ZR-4.2

55μA C/10

BAT PROG DC 1/10

100mV 1.8ms t_{TERM}

1/10 BRCL4079ZR-4.2

BAT BAT

BRCL4079ZR-4.2 BAT 4.05V

V_{RECHRG}

PROG

BRCL4079ZR-4.2	1.8ms		BAT
4.05V		80%	90%
CHRG			
			ESR
1Ω			
PROG			

ᵘ ĖÒĻ ƒ / Package Dimensions

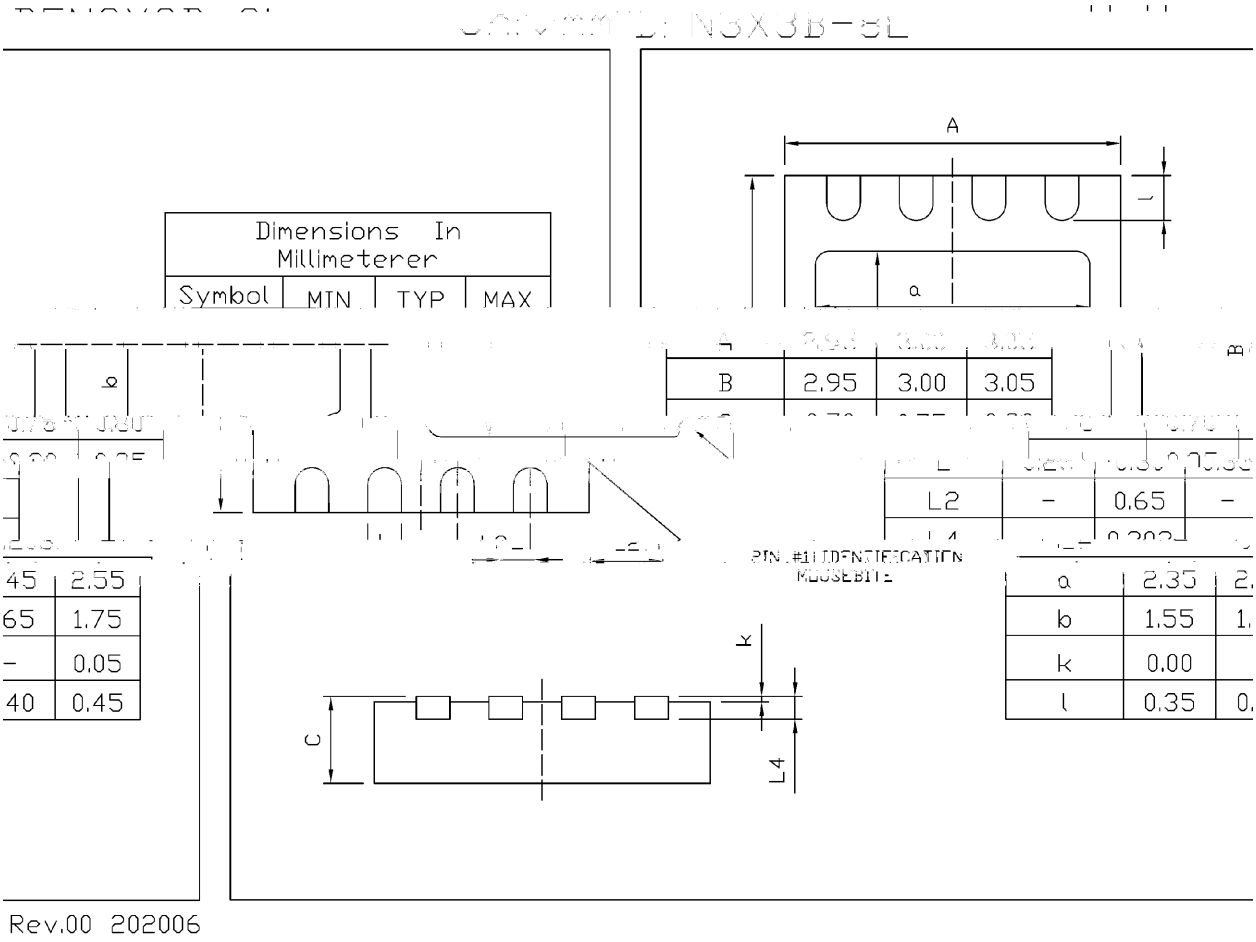

Ł. L"Ω / Marking Instructions



BR	
4079	
42	4.2V
****	

ŧħ ʃ ╗ ẘ´E ⅵ ʄ (ᾠ̈ ᴗ) / Whp shudwxuh Suriloh iru LU Uhior z Vroghulqj+SeOluhh,

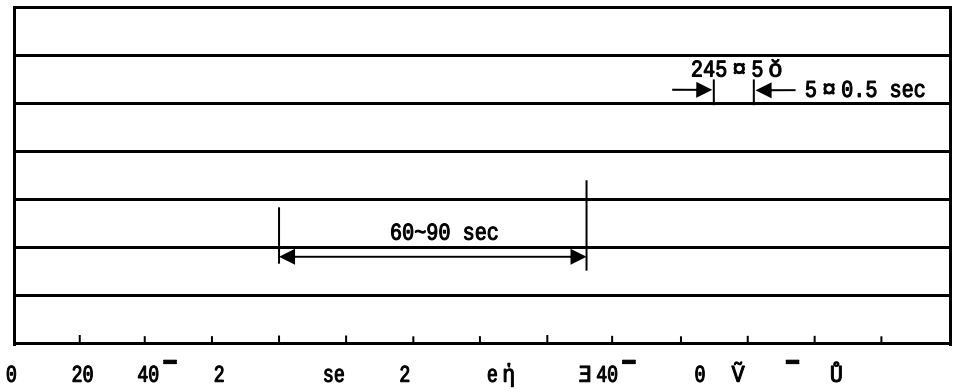

Note:

1	150 180 60 90sec;	1.Preheating:150~180	, Time:60~90sec.
2	245±5 5±0.5sec;	2.Peak Temp.:245±5	, Duration:5±0.5sec.
3	2 10 /sec.	3. Cooling Speed: 2~10	/sec.

⅃ ǖ ɑ ˝ ˋY Ţ / Resistance to Soldering Heat Test Conditions

260±5 10±1 sec. Temp.:260±5 Time:10±1 sec

ɒ ᴇ ᴄ— / Packaging SPEC.

/ REEL

Package Type	Units					Dimension (unit mm³)		
	Units/Reel /	Reels/Inner Box /	Units/Inner Box /	Inner Boxes/Outer Box /	Units/Outer Box /	Reel	Inner Box	Outer Box
DFN3×3B-8L	5,000	2	10,000	6	60,000	13 ×12	360×360×50	380×335×366

ä ɤ ʟ ̈Ω / Notices

All information provided in this document is subject to legal disclaimers.