& /& & 012304&506754& &

A	2020-9-16	All	All		
B	2021-4-15	1 2	3% 2%		

& & /& & ' 03652=>27 ; 3&

SOT23-3

Low dropout linear regulator in a SOT23-3 Plastic Package .

& & /& & ?09>@503&

30V	2.5μA	±2%

Low power consumption,Low voltage drop,Small temperature drift coefficient,High input voltage up to 30V,The static current 2.5μA,The output voltage accuracy:±2%.HF Product.

&

& & /& & (==A269>27 ; 3& &

For use in power equipment,Communication equipment,Audio and video equipment.

& & /& & , B@219A0 ; >& 256@2>&

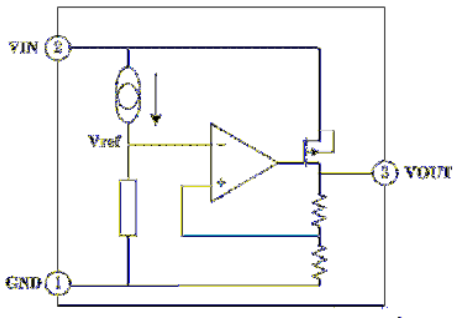

& & /& & C2 ; ; 2 ; <&



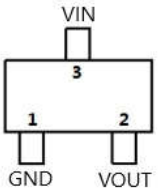

1	GND		3	VIN	
2	VOUT				

& & /& & %95 : 2 ; <&

/ See Marking Instructions.

&

Parameter	Symbol	Rating	Unit
Working Voltage	V_{IN}	-0.3~33	V
Thermal Resistance	$R_{\theta JA}$	250	/W
Power Consumption	P		

& & /& &) M=269A& (==A269>27 ; & 256@2>&

/ Basic Application



/ High Output Current Voltage Regulator

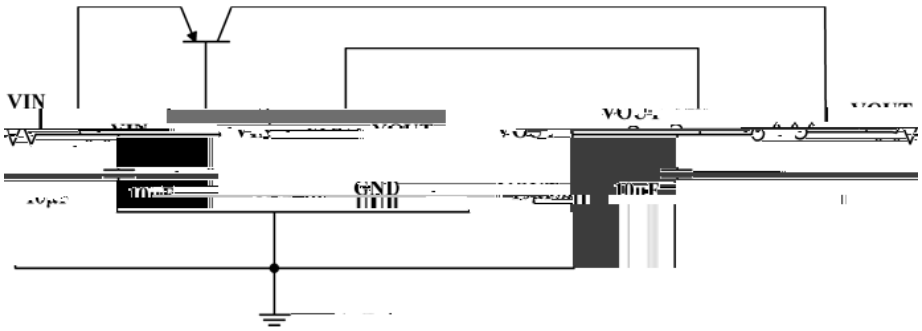

/ Short-Circuit Protection

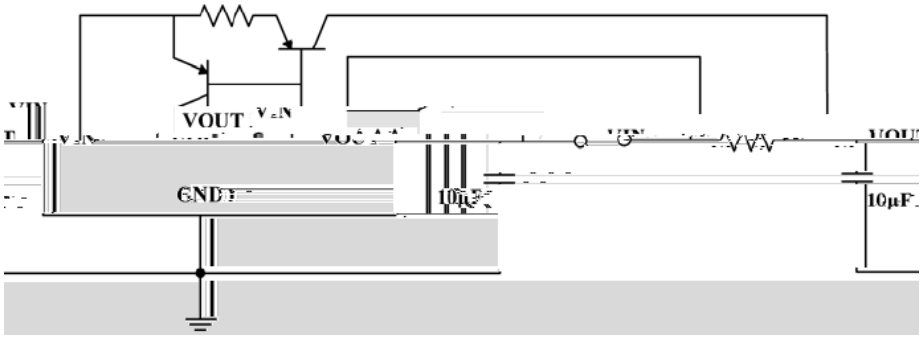

& & /& &)M=269A& (==A269>27 ; & 256@2>&

/ Circuit for Increasing Output Voltage

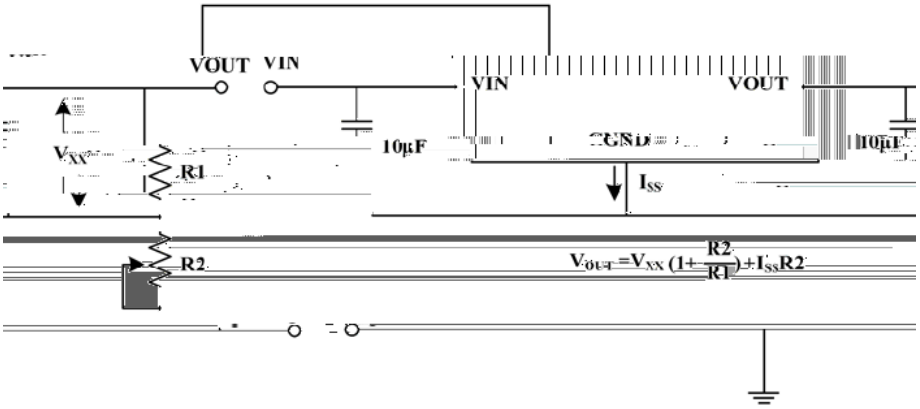

/ Constant Current Regulator

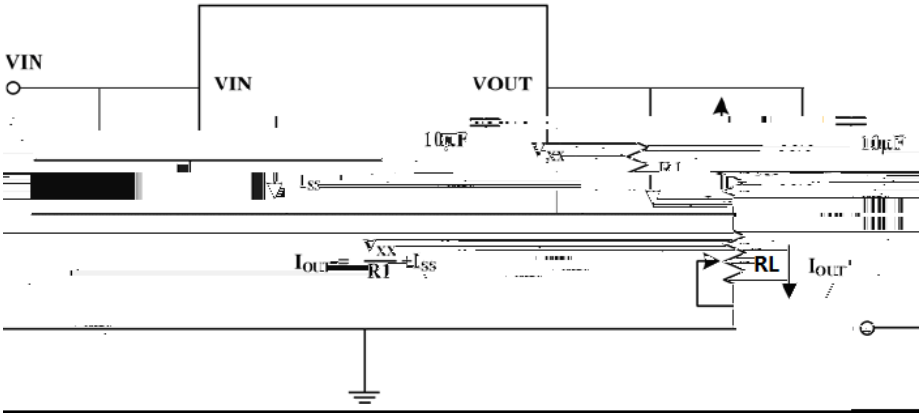

/ Double Output Circuit

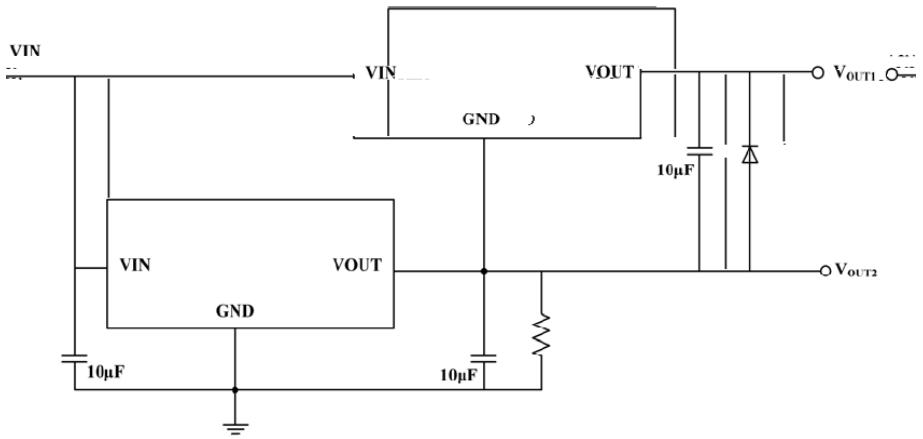

&& /

& & /& & %95 : 2 ; <&0 ; 3>5@6>27 ; 3&

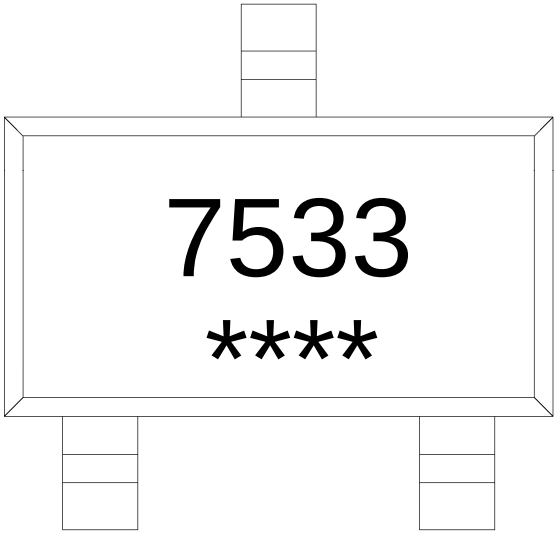

7533

****

Note:

7533:	Product Type.
****:	Lot No. Code, code change with Lot No.

! "#$$% &