SOT-89

Low dropout linear regulator in a SOT-89 Plastic Package .

24V 1.5μ

Parameter	Symbol	Rating	Unit
Working Voltage	V_{IN}	-0.3~+24	V
Thermal Resistance	R_{JA}	200	/W
Power Consumption	P_D		

/ Basic Application

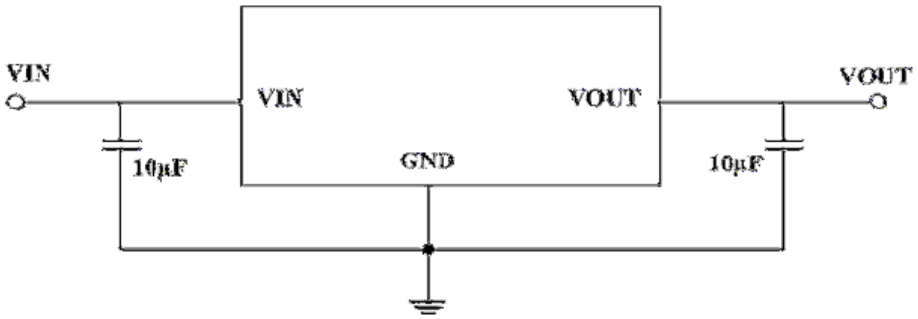

/ High Output Current Voltage Regulator

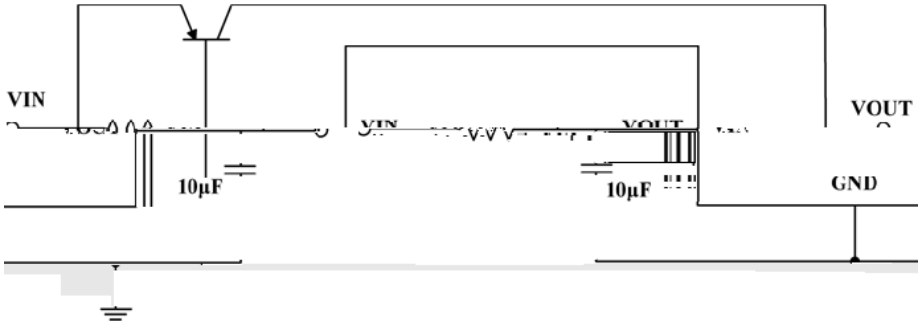

/ Short-Circuit Protection

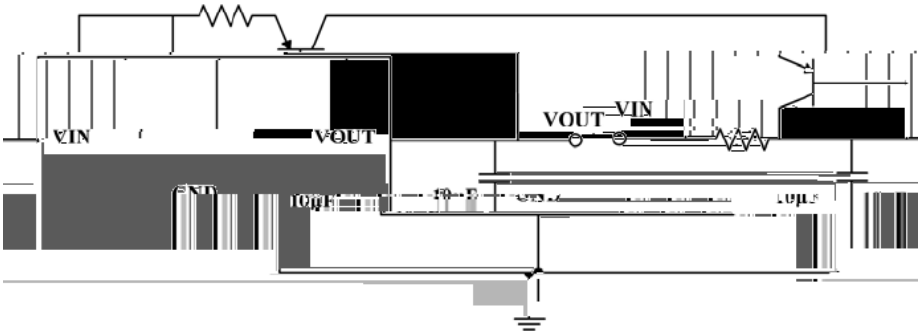

/ Circuit for Increasing Output Voltage

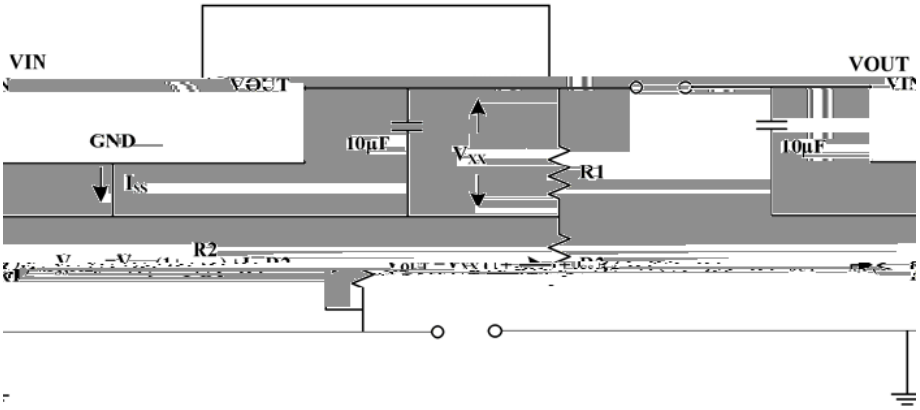

/ Constant Current Regulator

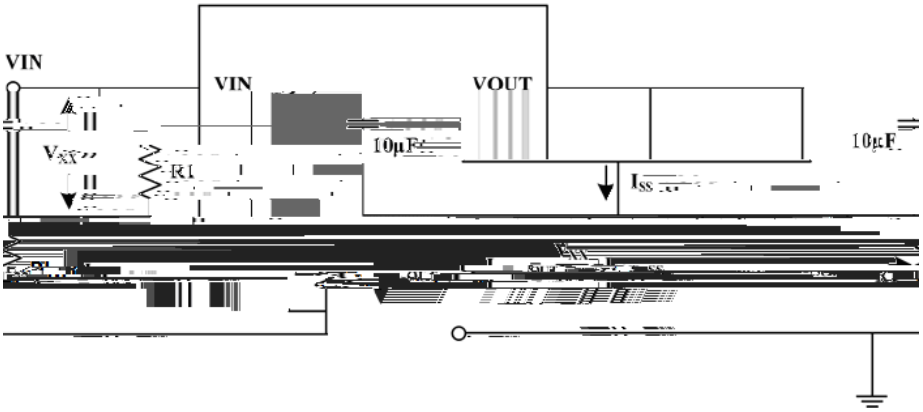

/ Double Output Circuit

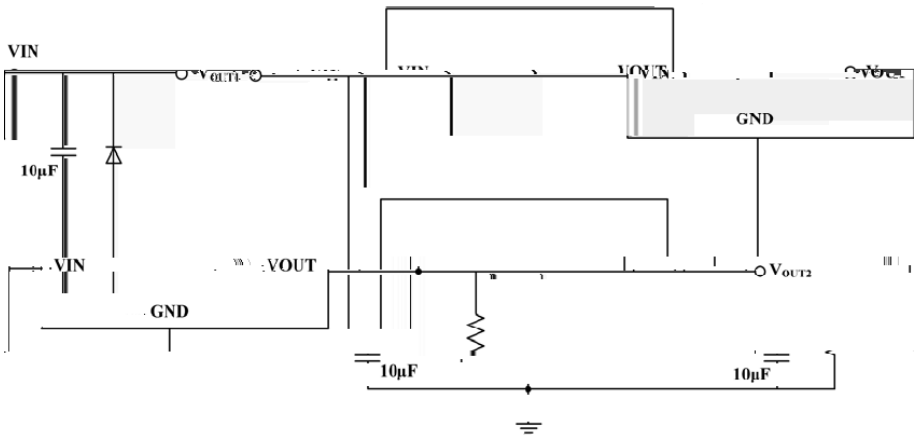

Temperature Profile for IR Reflow Soldering(Pb-Free)

Note:

1 150 180 60