WR0596 ṂṂ Ł ≠ ᵍ⁀ ǁ ˥

Schottky Diode in a TO-263 Plastic Package.

Ḥ* ᵇ я ᴗ ı Ḥ ı ǟ ı ᷾ ' ᴀ

Low forward voltage drop,low power losses,High efficiency operation.

ᷣ ᷤ ᴀ ᵢ ' ᷥ ᴪ ᴴ ı Ȁ ʜ ɔ ◊ ı ᴧ ᷦ ǁ ˥ ı RU0lq j ⁀ ǁ ˥ ı GF0GF ᷧ ᷨ ᴳ ᴲ ɔ – ɾ ᵇ ʒ ï

For use in high frequency inverters, switching power supplies, freewheeling diodes, OR-ing diode, dc-to-dc converters and reverse battery protection.

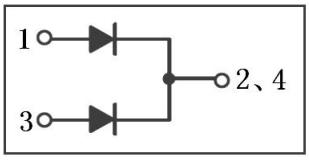



PIN1 χ Anode PIN 2 4 χ Cathode PIN 3 χ Anode

ð м ˥ ب ˝ See Marking Instructions.

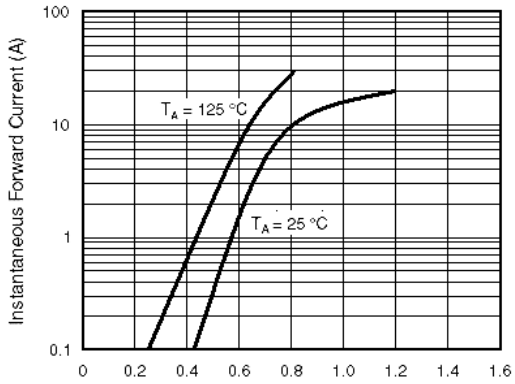
Instantaneous Forward Current (A)
100
10
1
0.1
0
0.2
0.4
0.6
0.8
1.0
1.2
1.4
1.6
T_A = 125 °C
T_A = 25 °C

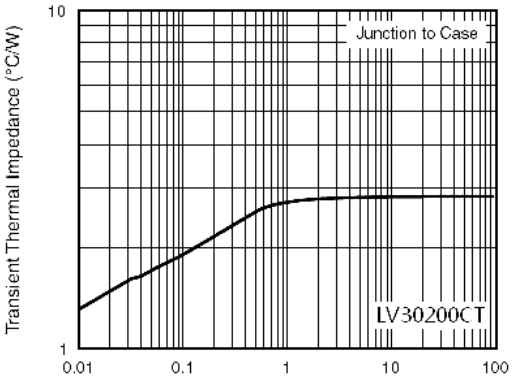
Transient Thermal Impedance (°C/W)
10
1
0.01
0.1
1
10
100
Junction to Case
LV30200CT

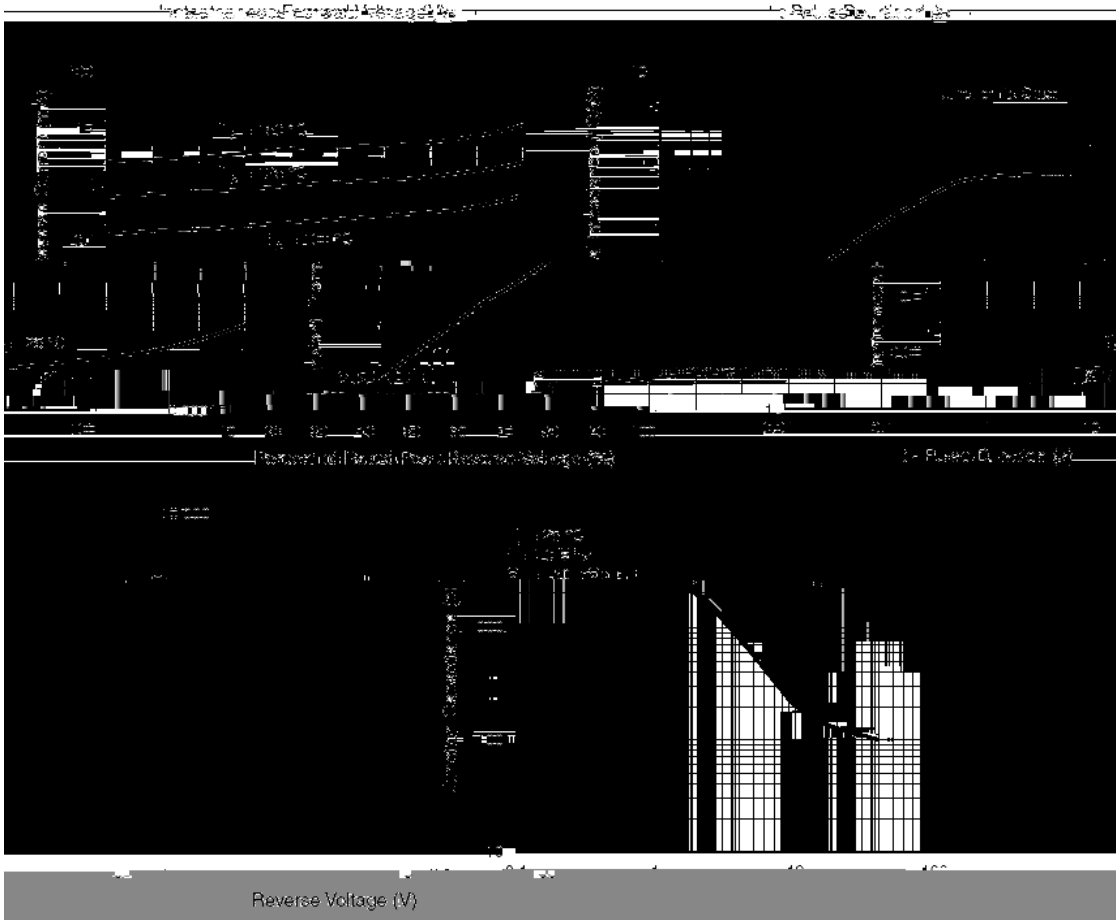
Reverse Voltage (V)

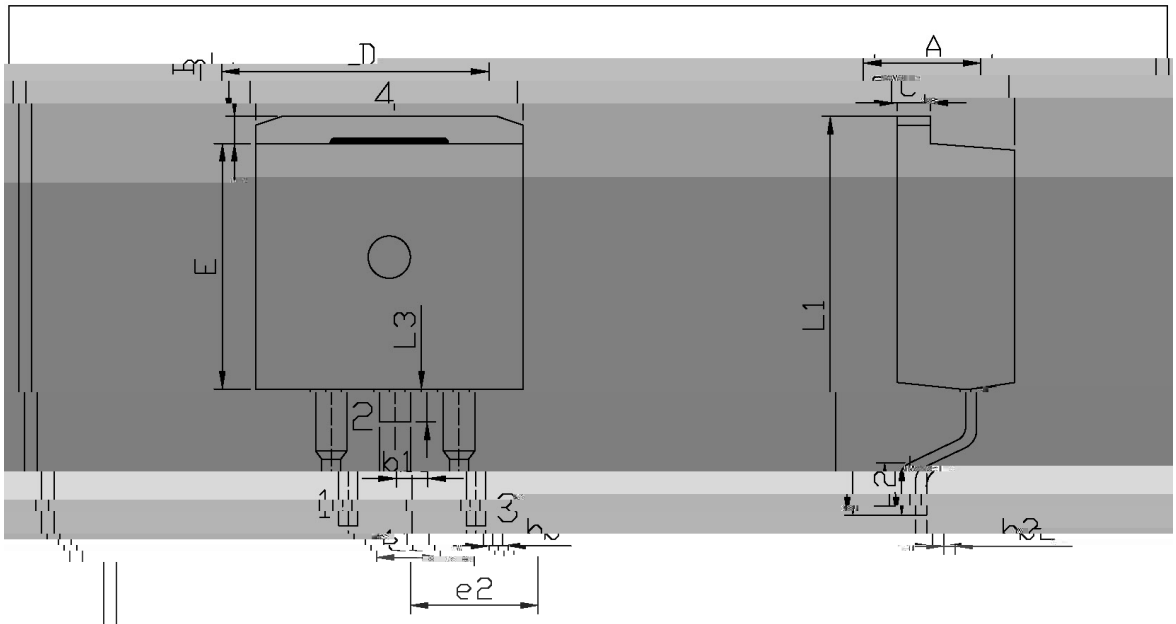

单位：mm

Dimensions In Millimeters			Dimensions In Millimeters		
Symbol	Min	Max	Symbol	Min	Max
A	4.30	4.70	L	9.00	9.40
B	1.00	1.40	e1	2.34	2.74

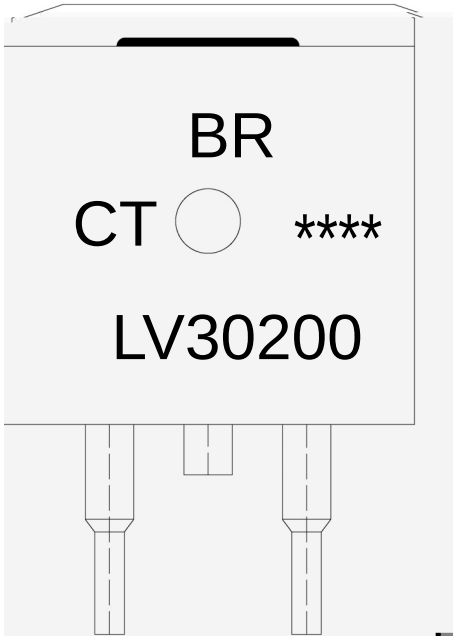

ب ˝ χ	
BR χ	ѭ ʒ ᴎ Ɱ
OY63533 χ	ѭ ƒ ᵝ ʒ ᴺ
FW=	ѭ ɲ ɯ̂ɲ ɹ ⸗
---- χ	ѭ ɨ ƒ ŋ̋ ᴺ Ɱ ɪ ɞ ɨ ƒ ŋ̋ ᴺ ψ ק
Note:	
BR:	Company Code
OY63533 χ	Product Type.
FW:	Internal Structure
****:	Lot No. Code, code change with Lot No.