
/ Descriptions

Schottky Diode in a TO-263 Plastic Package.

/ Features

Low power loss, high efficiency. HF product.

/ Applications

For use in low voltage,high frequency inverters, free wheeling, and polarity protection applications.

/ Equivalent Circuit

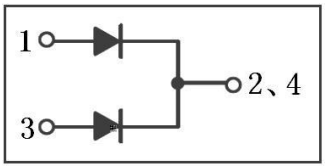

/ Pinning



PIN1 Anode PIN 2 4 Cathode PIN 3 Anode

/ h_{FE} Classifications & Marking

See Marking Instructions.

MBRB20150CT
Rev.G Sep

MBRB20150CT

Rev.G Sep.-2022

/ Package Dimensions

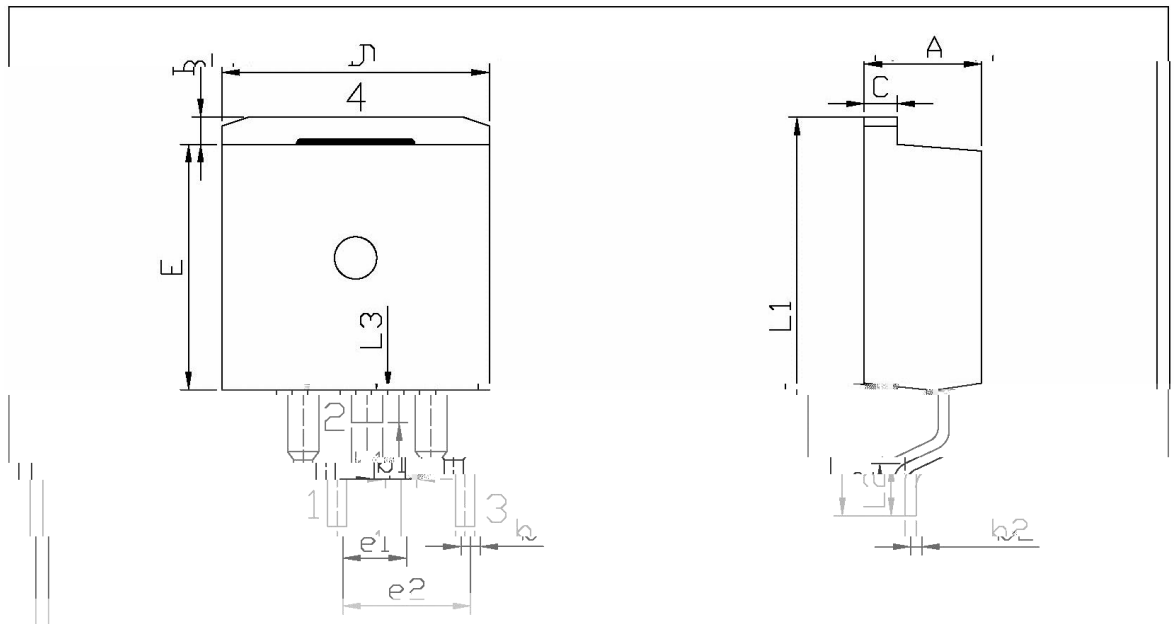

单位：mm

Symbol	Dimensions In Millimeters		Symbol	Dimensions In Millimeters	
	Min	Max		Min	Max
A	4.30	4.70	E	9.00	9.40
[illegible]	[illegible]	[illegible]	[illegible]	[illegible]	[illegible]
[illegible]	[illegible]	[illegible]	[illegible]	[illegible]	[illegible]
[illegible]	[illegible]	[illegible]	L1	15.00	[illegible]
b2	0.40	0.60	L2	2.24	2.84

/ Marking Instructions

