TO-3P PNP Silicon PNP transistor in a TO-3P Plastic Package.

100W NJW0281GC

Recommend for 100W high fidelity audio frequency amplifier output stage, Complementary to NJW0281GC.

Power amplifier applications.

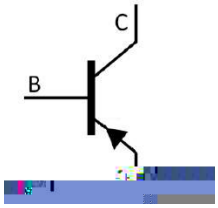

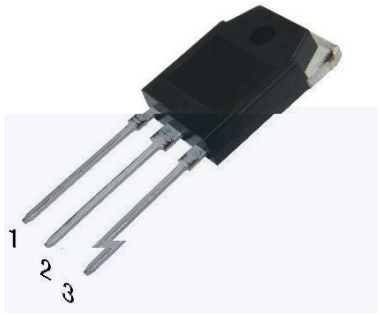

PIN1 Base PIN 2 Collector PIN 3

ώ ᾱ ᾱ ᾶ ᾶ

Parameter	Symbol	Rating	Unit
Collector to Base Voltage	V_{CBO}	-360	V
Collector to Emitter Voltage	V_{CEO}	-360	V
Emitter to Base Voltage	V_{EBO}	-5	V
Collector Current - Continuous	I_C	-15	A
Peak Collector Current	I_{CP}	-30	A
Base Current	I_B	-1.5	A
Collector Power Dissipation	$P_{C(TC=25\ )}$	150	W
Junction Temperature	T_j	150	
Storage Temperature Range	T_{stg}	-55 150	

⁄ ᾱ ᾱ ᾶ ᾶ

Parameter	Symbol	Test Conditions	Min	Typ	Max	Unit
Collector to Emitter Breakdown Voltage	V_{CEO}	I_C=-50mA I_B=0	-360			V
Collector Cut-Off Current	I_{CBO}	V_{CB}=-230V I_E=0			-5.0	μA
Emitter Cut-Off Current	I_{EBO}	V_{EB}=-5.0V I_C=0			-5.0	μA
DC Current Gain	$h_{FE(1)}$	V_{CE}=-5.0V I_C=-1.0A	55		160	
	$h_{FE(2)}$	V_{CE}=-5.0V I_C=-7.0A	35	80		
Collector to Emitter Saturation Voltage	$V_{CE(sat)}$	I_C=-8.0A I_B=-0.8A		-1.5	-3.0	V
Base to Emitter Voltage	V_{BE}	V_{CE}=-5.0V I_C=-7.0A		-1.2	-1.5	V
Transition Frequency	f_T	I_C=-1.0A V_{CE}=-5.0V		30		MHz
Collector output capacitance	C_{ob}	V_{CB}=-10V I_E=0 f=1.0MHz		360		pF

ƒ ĂÉ M ƒ

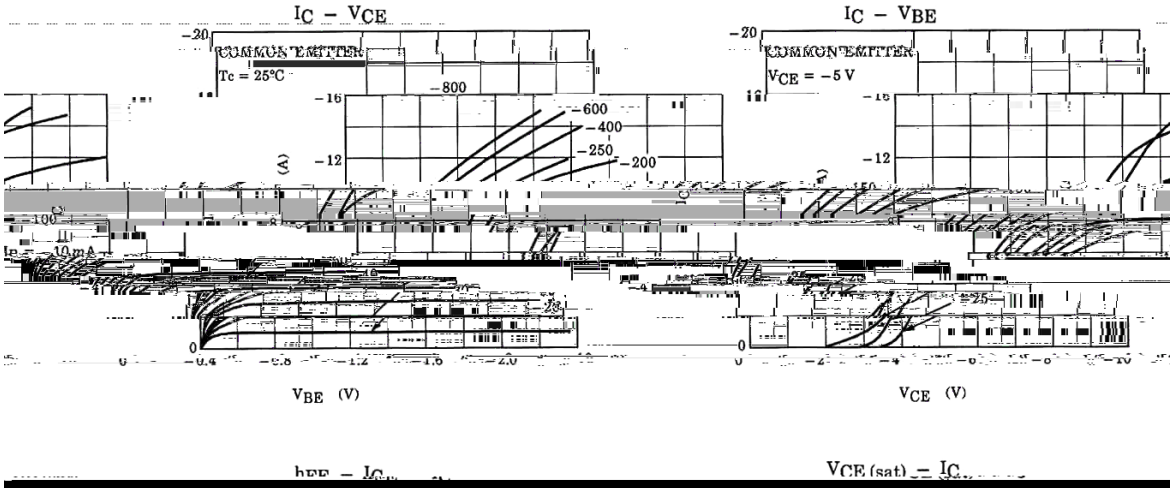
IC – VCE
COMMON EMITTER
Tc = 25°C
–800
–600
–400
–250
–200
–20
–16
–12
0
VBE (V)
IC – VBE
COMMON EMITTER
VCE = –5 V
–20
–12
0
VCE (V)



ᵘ ĖÒĻ ʃ

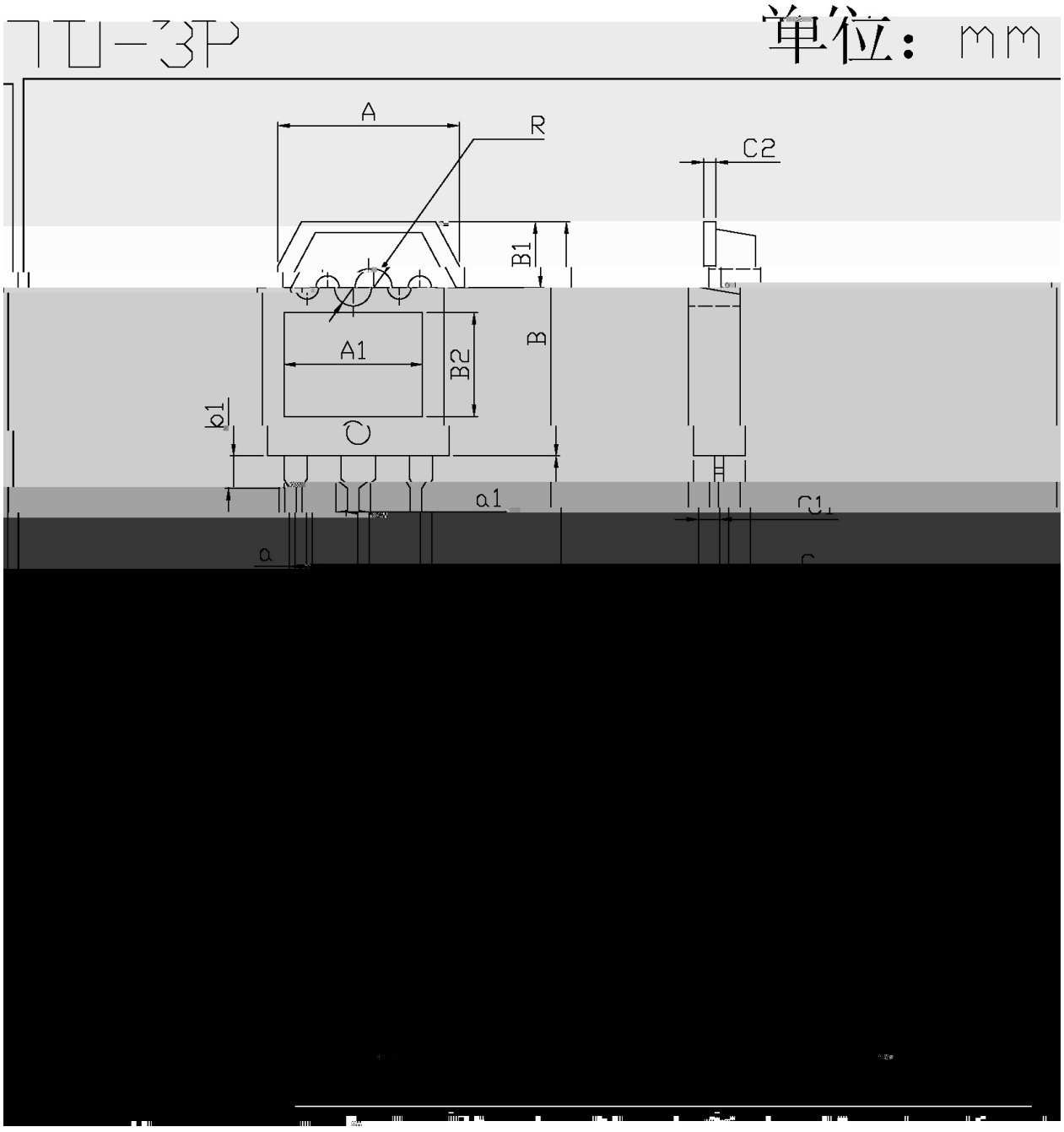



BR

NJW0302GC

****

Note:

BR:	Company Code.
NJW0302GC:	Product Type.
****:	Lot No. Code, code change with Lot No.

↓ ṣ ╗ ẘ ́E ⅵ ƒ ᾠ ̌ʊ



1	25	150	60	90sec;	
2	255±5			5±0.5sec;	
3		2	10	/sec.	

Note:

1.Preheating:25~150 , Time:60~90sec.

2.Peak Temp.:255±5 , Duration:5±0.5sec.

3. Cooling Speed: 2~10 /sec.

⅃ ǖ ɑ ̄ ̀Y Ţ

270±5	10±1 sec.	Temp.:270±5	Time:10±1 sec

ɒ ᴇ ᐸ—

/ TUBE

Package Type	Units	Dimension	(unit mm^3) mm