«	ŧ	n	ŧ	ضخ	

US5AC~US5MC

Rev.B Feb.-2021

DATA SHEET

& ' / Descriptions

! " # $ % & ' ( ) * % + ' (, * % - . /

Surface Mount Ultrafast Recovery Rectifier,Reverse Voltage:50 to1000V,Forward Current:5.0A, SMC package.

( ) / Features

0 1 2 3 4 5 % 6 7 8 % 9 : ; < = > ? @ % A B C D E F . % 9 G H I /

Glass Passivated Chip Junction High efficiency Lead free in comply with EU R0HS 2011/65/EU directives For surface mounted applications,Halogen free product.

* + / Applications

J K B L

General purpose.

, - . / 0 1 / Equivalent Circuit



" # $ % / Marking

M N O P Q / See Marking Instructions.

US5A

0 8 9 = > ? / Electrical Characteristic Curve

Fig.1 Reverse Recovery Time Characteristic And Test Circuit Diagram

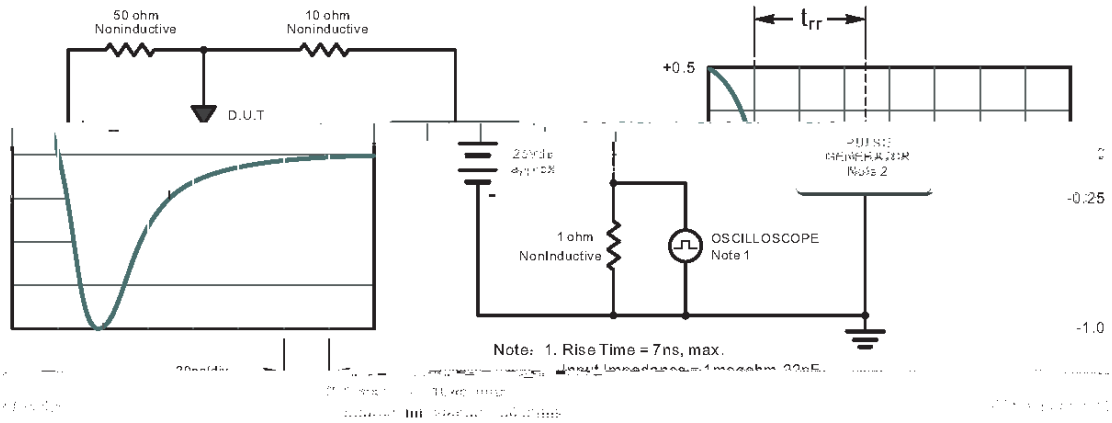

haracteristics

Fig.2 Maximum Average Forward Current Rating

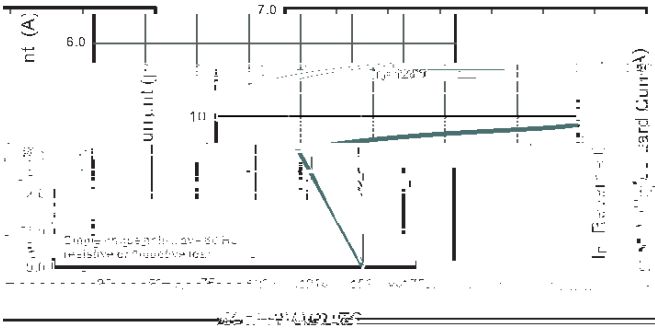

Fig.3 Typical Reverse C

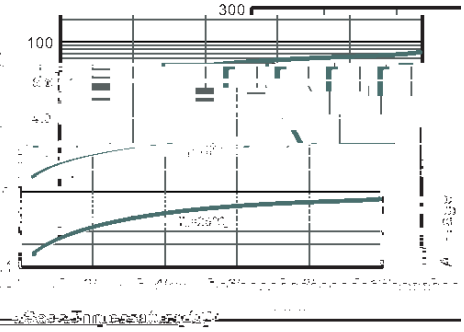

Fig.5 Typical Junction Capacitance

Fig.4 Typical Forward Characteristics

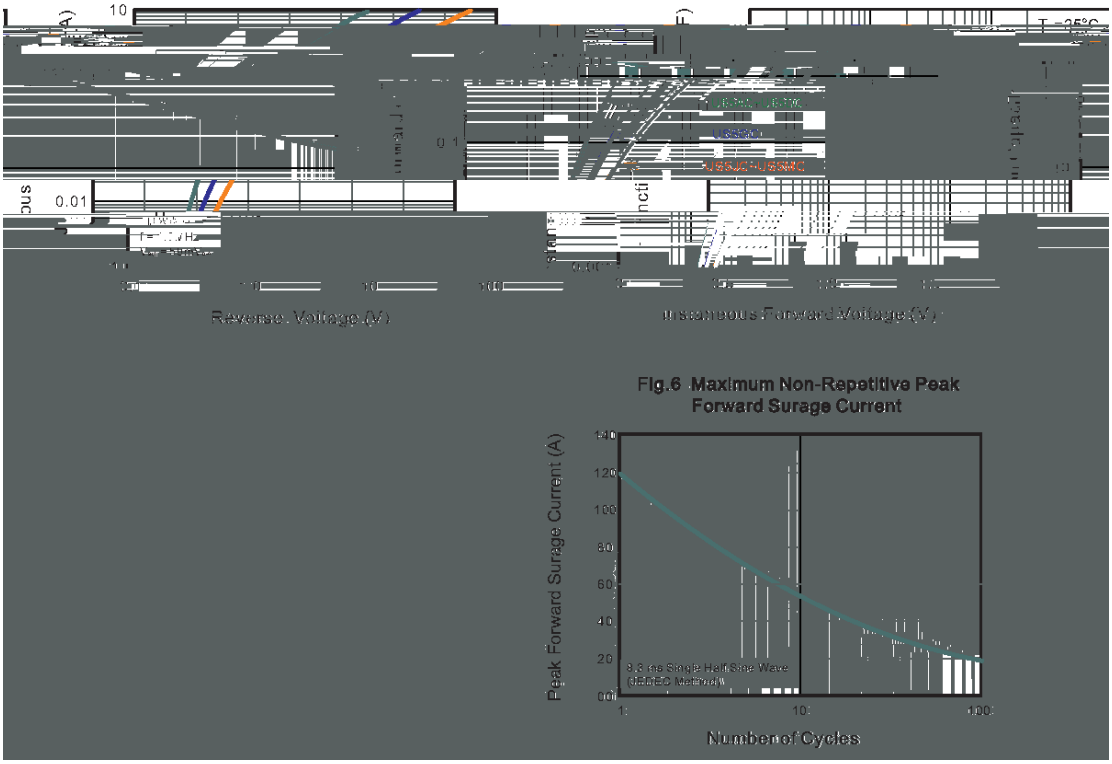

Fig.6 Maximum Non-Repetitive Peak Forward Surage Current

@ A B C ? / Package Dimensions

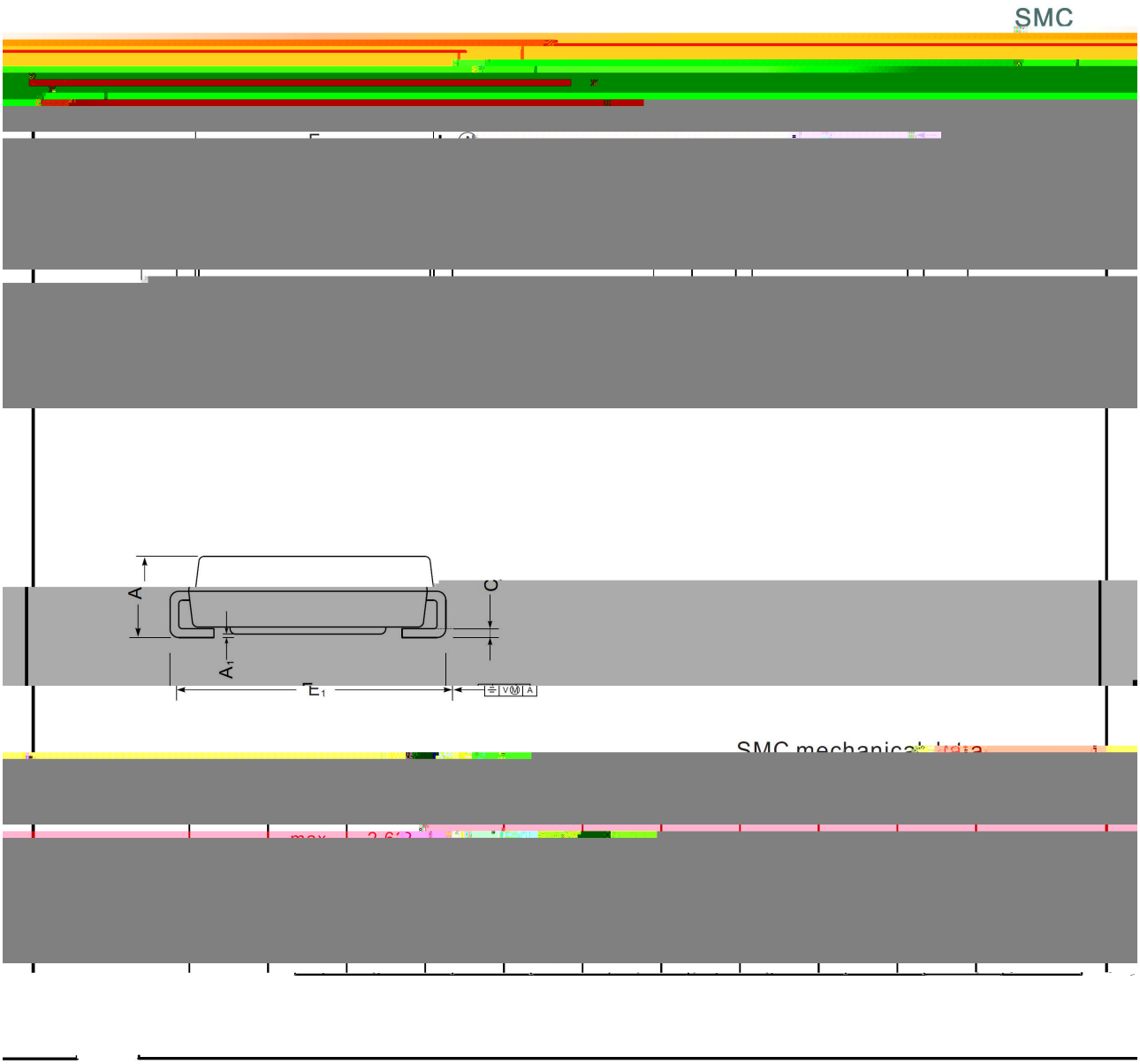

" # D E / Marking Instructions

Marking

Type number	Marking code

" # D E / Marking Instructions

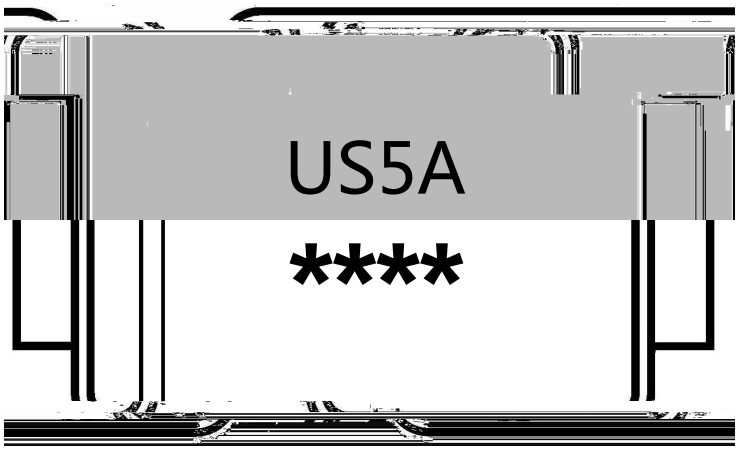

US5A

**** 1 **F** 3 **F**

Note:

US5A Product Type Code

**** Lot No. Code The 1st **F** means:YM Code The last 3 **F**means:little Lot No Code

H I J K L = > ? (M N) / OPQRPSTUVSPGWSXYZ[PGYXSG\]G]PY[X^G_X[`PSZabcWdefSPPg



				Note:
1	150 180	60 90sec; n		1.Preheating:150~180 , Time:60~90sec.
2	245±5	5	5±0.5sec;	2.Peak Temp.:2